US Army Corps of Engineers®
CHICAGO DISTRICT

UPPER DES PLAINES RIVER
LEVEE 37 - PUMP STATION UPGRADE
MOUNT PROSPECT, ILLINOIS

SOLICITATION NO.: W912P6-19-B-00XX
CONTRACT NO.: W912P6-19-C-00XX
ISSUE DATE: MARCH 31, 2020

SHEET INDEX

SHEET NUMBER	SHEET REFERENCE	TITLE
1.	G-001	LOCATION, VICINITY MAP AND SHEET INDEX
2.	G-002	GENERAL NOTES, LEGENDS AND SYMBOLS
3.	G-101	WORK POINTS
4.	V-001	SURVEY CONTROL POINTS AND BENCHMARK
5.	CD-101	CIVIL DEMOLITION SHEET
6.	C-101	CIVIL PLAN VIEW
7.	C-102	SOIL DISPOSAL LOCATION
8.	C-501	GUARDRAIL DETAILS
9.	C-502	RIPRAP DETAILS
10.	SD-101	CLOSURE STRUCTURE #6 DEMOLITION PLAN
11.	SD-102	PUMP STATION #2 DEMOLITION PLAN
12.	SD-201	BACKFLOW STRUCTURE 1 DEMOLITION
13.	SD-202	CLOSURE STRUCTURE #6 DEMOLITION ELEVATION
14.	SD-203	PUMP STATION #2 DEMOLITION ELEVATION
15.	SD-501	BACKFLOW STRUCTURE 1 DEMOLITION
16.	S-101	NEW PUMP STATION PLAN VIEW
17.	S-102	CLOSURE STRUCTURE #6 ADDITIONS PLAN VIEW
18.	S-103	PUMP STATION #2 ADDITIONS PLAN VIEW
19.	S-201	ELEVATION VIEWS
20.	S-202	NEW FLOODWALL ELEVATION
21.	S-203	CLOSURE STRUCTURE #6 ADDITIONS ELEVATION VIEW
22.	S-204	PUMP STATION #2 ADDITIONS ELEVATION VIEW
23.	S-501	DETAIL 1
24.	S-502	DETAIL 2
25.	S-503	DETAIL 3
26.	S-504	DETAIL 4
27.	S-505	TRASHRACK DETAIL
28.	S-506	HEAD WALL DETAIL
29.	S-507	MISCELLANEOUS DETAILS
30.	S-508	CULVERT DETAILS
31.	S-509	BACKFLOW STRUCTURE 1 MODIFICATION
32.	S-510	BACKFLOW STRUCTURE 1 MODIFICATION DETAIL
33.	S-511	BACKFLOW STRUCTURE 1 MODIFICATION DETAIL
34.	S-512	HEADWALL DETAIL
35.	S-513	CLOSURE STRUCTURE #6 ADDITIONS REINFORCEMENT DETAIL
36.	S-514	PUMP STATION #2 ADDITIONS REINFORCEMENT DETAIL
37.	M-101	PUMP STATION PLAN VIEW
38.	M-301	SECTION 1
39.	M-302	SECTION 2
40.	M-303	SECTION 3
41.	M-304	SECTION 4
42.	M-501	FSI INLET CONE DETAIL
43.	M-502	FLAP GATE AND DUCKBILL DETAIL
44.	M-601	SCHEDULES
45.	M-901	3D PRESENTATION
46.	E-001	LEGEND, ABBREVIATION & GENERAL NOTES
47.	E-101	STATION PLAN
48.	E-301	STATION SECTION
49.	E-501	MCC ELEVATION
50.	E-502	DETAILS
51.	E-503	DETAILS
52.	E-504	DETAILS
53.	E-601	POWER ONE LINE DIAGRAM
54.	E-602	PANEL SCHEDULE
55.	E-603	PUMP CONTROL DIAGRAM
56.	ES-101	SITE PLAN
57.	R-001	REFERENCE DRAWING
58.	R-002	REFERENCE DRAWING
59.	R-003	REFERENCE DRAWING
60.	R-004	REFERENCE DRAWING
61.	R-005	REFERENCE DRAWING
62.	R-006	REFERENCE DRAWING
63.	R-007	REFERENCE DRAWING
64.	R-008	REFERENCE DRAWING
65.	R-009	REFERENCE DRAWING
66.	R-010	REFERENCE DRAWING

US Army Corps of Engineers®

MARK	DESCRIPTION	DATE

DESIGNED BY:
DRAWN BY:
CHECKED BY:
SUBMITTED BY:
SIZE: ANSI D
ISSUE DATE: MARCH 31, 2020
SOLICITATION NO.: W912P6-19-B-00XX
CONTRACT NO.: W912P6-19-C-00XX
PROJECT ID:
FILE NAME: 113244_G-001.dgn

U.S. ARMY CORPS OF ENGINEERS
CHICAGO DISTRICT
231 S. LASALLE ST., SUITE 1500
CHICAGO, ILLINOIS 60604

UPPER DES PLAINES RIVER
LEVEE 37 - PUMP STATION UPGRADE
MOUNT PROSPECT, ILLINOIS

LOCATION, VICINITY MAP AND SHEET INDEX

SHEET ID
G-001

GENERAL NOTES

1. THE CONTRACTOR SHALL PERFORM ALL WORK WITHIN THE SPECIFIED WORK LIMITS.
2. ALL MECHANICAL EQUIPMENT SHALL BE INSTALLED IN ACCORDANCE WITH MANUFACTURERS RECOMMENDATIONS AND AS APPROVED BY THE GOVERNMENT.
3. THE CONTRACTOR IS RESPONSIBLE FOR EXAMINING ALL SITE CONDITIONS PRIOR TO COMMENCEMENT OF CONSTRUCTION AND MUST COMPARE THE SITE CONDITIONS AS INDICATED ON THE DRAWINGS.
4. THE CONTRACTOR MUST CALL J.U.L.I.E AND DIGGER AT 811 TO LOCATE UNDERGROUND UTILITIES PRIOR TO PERFORMING ANY EXCAVATION.
5. UTILITIES AND SITE FEATURES SHOWN ON THE DRAWINGS ARE APPROXIMATE AND MUST BE VERIFIED BY THE CONTRACTOR IN THE FIELD. THE CONTRACTOR MUST IMMEDIATELY REPORT ANY DISCREPANCIES TO THE COR.
6. THE CONTRACTOR MUST BE RESPONSIBLE FOR THE PROTECTION OF ALL UTILITIES WITHIN THE WORK LIMITS. UTILITIES DAMAGED DURING CONSTRUCTION MUST BE REPAIRED OR REPLACED AT NO ADDITIONAL COST TO THE GOVERNMENT.
7. THE CONTRACTOR MUST VERIFY ALL ELEVATIONS SHOWN ON THE DRAWINGS. IF DISCREPANCIES BECOME APPARENT, THE COR MUST BE NOTIFIED PRIOR TO TART OF WORK.
8. ALL AREAS AND FACILITIES DISTURBED DUE TO CONSTRUCTION WORK MUST BE RESTORED TO PRE-CONSTRUCTION CONDITION OR AS SPECIFIED IN THE PLANS AND SPECIFICATION.
9. ALL WORK MUST BE IN ACCORDANCE WITH CORPS OF ENGINEERS SAFETY AND HEALTH REQUIREMENTS MANUAL EM 385-1-1.

STANDARD ABBREVIATIONS

ACOE	ARMY CORPS OF ENGINEERS
CB	CATCH BASIN
CL	CENTERLINE
CJ	CONSTRUCTION JOINT
COR	CONTRACTING OFFICER'S REPRESENTATIVE
COE	CORPS OF ENGINEERS
CMP	CORRUGATED METAL PIPE
DIA.	DIAMETER
DBH	DIAMETER AT BREAST HEIGHT
DTM	DIGITAL TERRAIN MODEL
D.I.P.	DUCTILE IRON PIPE
EHH	ELECTRICAL HAND HOLE
EMH	ELECTRICAL MAN HOLE
ELEV	ELEVATION
EJ	EXPANSION JOINT
EN	EXTRACTION WELL
FF	FINISH FLOOR
FH	FIRE HYDRANT
GF	GRADE AT FOUNDATION
G.D.	GRATE DRAIN
G.M.H.	GRATED MANHOLE
HWL	HIGH WATER ELEVATION
H	HORIZONTAL
IDOT	ILLINOIS DEPARTMENT OF TRANSPORTATION
LCP	LOCAL CONTROL PANEL
MH	MANHOLE
MIN	MINIMUM
MW	MONITORING WELL
NGVD	NATIONAL GEODETIC VERTICAL DATUM
NWL	NATURAL WATER LINE
NAVD	NORTH AMERICAN VERTICAL DATUM
NTS	NOT TO SCALE
OSI	OCEAN SURVEYS, INC.
S	PIPE SLOPE
RCP	REINFORCED CONCRETE PIPE
SSP	STEEL SHEET PILE
TYP.	TYPICAL
VIF	VERIFY IN FIELD
V	VERTICAL
WLP	WELL POINTS
WL	WORK LIMIT
WP	WORK POINT

LEGEND

LINE STYLES

	FENCE	SD	STORM DRAIN
10	DESIGN CONTOUR	E	ELECTRICAL PRIMARY
11	EXISTING CONTOUR	ES	ELECTRICAL SECONDARY
	EDGE OF WATER	T	TELEPHONE LINE
	WORK LIMITS	DWR	WATER DOMESTIC MAIN
SAN	SANITARY FORCE MAIN	G	GAS LINE
W	WATER MAIN	RC	CONDUITS
FO	FIBER OPTIC	COMM	TELECOM
		PW	WATER (PUBLIC MAIN)

SYMBOLS

D	STORM MANHOLE	W.L. AT '( )	WATER LEVEL
W	WATER MANHOLE	H	ELECTRIC HANDHOLE
	TRIANGULATION POINT		GUY WIRE
E	ELECTRICAL MANHOLE		UTILITY POLE
MW	MONITORING WELL		TREE
	WATER VALVE VAULT	CB	CATCH BASIN
	FIRE HYDRANT	CB	CATCH BASIN ROUND
	LIGHT FIXTURE		
	RIPRAP		GRAVEL PATH

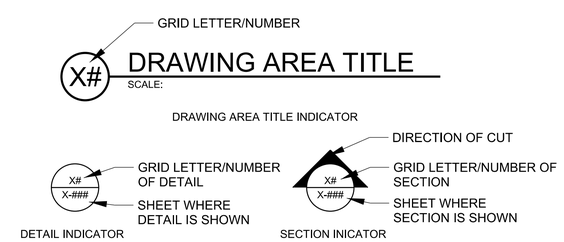

US Army Corps of Engineers®

MARK	DESCRIPTION	DATE

DESIGNED BY:
DRAWN BY: KPC
CHECKED BY:
SUBMITTED BY:
SIZE: ANSI D
FILE NAME: 113244_G-002.dgn
ISSUE DATE: 12/2018
SOLICITATION NO.: W912P6-19-B-00XX
CONTRACT NO.: W912P6-19-C-00XX
PROJECT ID:
PROJECT ID

U.S. ARMY CORPS OF ENGINEERS
CHICAGO DISTRICT
231 S. LASALLE ST. SUITE 1500
CHICAGO, ILLINOIS 60604

UPPER DES PLAINES RIVER
LEVEE 37 - PUMP STATION UPGRADE
MOUNT PROSPECT, ILLINOIS

GENERAL NOTES, LEGEND AND SYMBOLS

SHEET ID

G-002

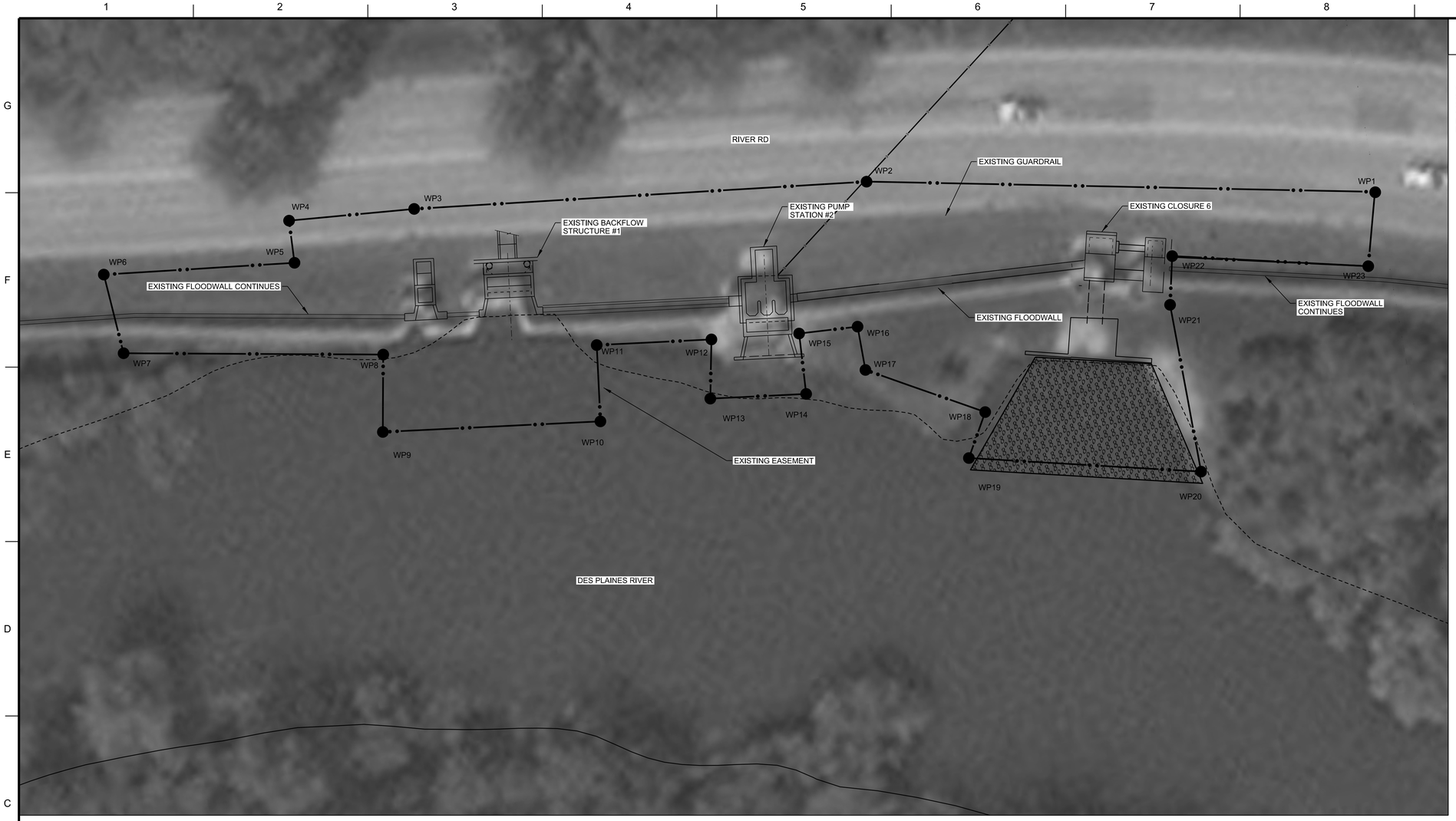

D1 WORK LIMITS - PLAN VIEW

SCALE: 1" = 10'

PLAN NORTH

0 20' 40'

GENERAL NOTES:

1. ANY TEMPORARY LANE CLOSURES, OR OTHER ENCROACHMENTS INTO THE IDOT ROW FOR RIVER RD MUST BE PRE-COORDINATED WITH IDOT UNDER THEIR PERMITTING PROCEDURES. REFER TO SPECIFICATION 01 10 00.
2. WORK LIMITS ARE AS SHOWN ON THIS SHEET, WHICH INCLUDES WORK AREA AND STAGING/STORAGE AREA. CONTRACTOR MAY NEGOTIATE ADDITIONAL STAGING/STORAGE AREA OUTSIDE THE LIMITS OF THIS CONTRACT IF DESIRED.

WORK POINT	NORTHING	EASTING
WP1	1979523.99	1104604.65
WP2	1979352.82	1104570.88
WP3	1979197.57	1104553.05
WP4	1979154.49	1104549.56
WP5	1979153.82	1104564.16
WP6	1979088.52	1104556.77
WP7	1979090.52	1104584.60
WP8	1979178.39	1104600.55
WP9	1979173.63	1104626.75
WP10	1979247.97	1104636.15
WP11	1979251.26	1104610.09
WP12	1979290.46	1104615.02
WP13	1979286.55	1104635.01
WP14	1979319.29	1104639.14
WP15	1979320.51	1104618.25
WP16	1979340.72	1104619.43
WP17	1979340.79	1104634.56
WP18	1979378.85	1104655.98
WP19	1979370.57	1104670.56
WP20	1979448.41	1104689.05
WP21	1979447.88	1104630.69
WP22	1979451.48	1104614.30
WP23	1979517.30	1104629.44

US Army Corps of Engineers®

MARK	DESCRIPTION	DATE

DESIGNED BY:
DRAWN BY:
CHECKED BY:
SUBMITTED BY:
SIZE:
ISSUE DATE: 12/2018
SOLICITATION NO.: W912P6-19-B-00XX
CONTRACT NO.: W912P6-19-C-00XX
PROJECT ID: PROJECT ID
FILE NAME: 113244_G-101.dgn

U.S. ARMY CORPS OF ENGINEERS
CHICAGO DISTRICT
231 S. LASALLE ST., SUITE 1500
CHICAGO, ILLINOIS 60604

UPPER DES PLAINES RIVER
LEVEE 37 - PUMP STATION UPGRADE
MOUNT PROSPECT, ILLINOIS

WORK POINTS

SHEET ID

G-101

HORIZONTAL & VERTICAL CONTROL POINTS

POINT	IL EAST NAD83 STATEPLANE COORDINATES		ELEV. NAVD88	ELEV.	DESCRIPTION
	NORTHING (Y)	EASTING (X)			
2	1980813.42	1105304.74	640.694		USACE DISK
12	1982253.37	1104541.39	637.282		MAG NAIL

GENERAL NOTES

1. THE SURVEY CONDITIONS SHOWN ON THESE DRAWINGS ARE FROM A SEPTEMBER 2015 SURVEY PERFORMED BY USACE CHICAGO DISTRICT AND REPRESENTS CONDITIONS EXISTING AT THAT TIME. EXISTING CONDITIONS DURING CONSTRUCTION MAY VARY AND DIFFER FROM THOSE SHOWN. THE CONTRACTOR SHALL TAKE ALL NECESSARY ACTIONS TO ASSESS THE EXISTING CONDITIONS AT THE TIME OF BIDDING, AND INCLUDE COST ACCORDINGLY IN THE BID.
2. ALL COORDINATES SHOWN ARE REFERENCED TO THE ILLINOIS STATE PLANE COORDINATE SYSTEM, EAST ZONE, NORTH AMERICAN DATUM OF 1983 (NAD83) U.S. FEET.
3. ALL ELEVATIONS SHOWN ARE REFERENCED TO THE NORTH AMERICAN VERTICAL DATUM OF 1988 (NAVD88) U.S. FEET.

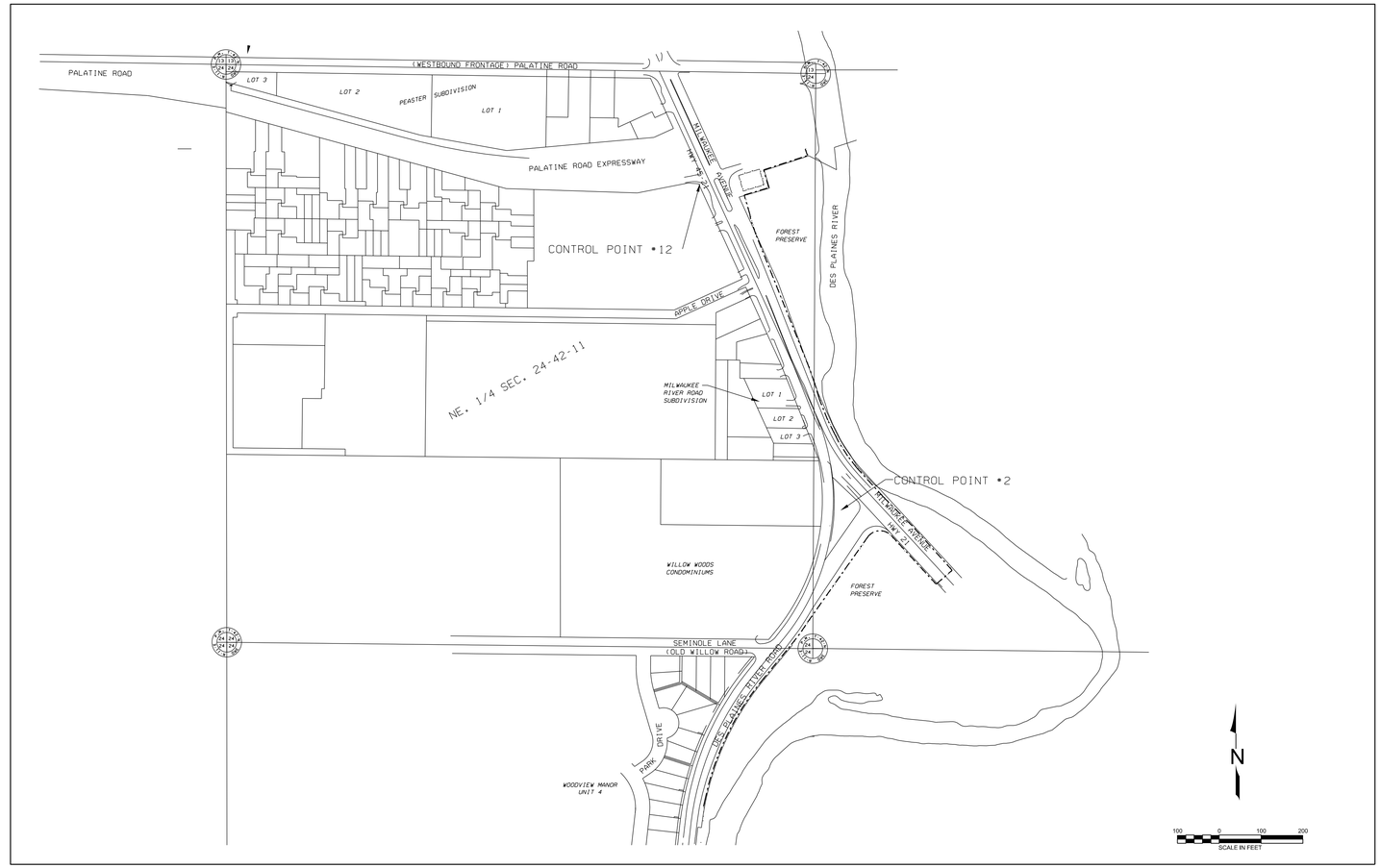

USACE Survey Monument Archival & Retrieval Tool Datasheet Type: Read-Only

Designation: CP 2
Project: Levee 37
Stamping: N/A
PID NGS: COE: AF11900
State: Illinois
County:
District: Chicago
Nearest Town: Prospect Heights
USGS Quad:
T.R.S.:
Nearest Hwy/Mi: US-45
Date Recovered: 08/21/2015
By: USACE
Condition/Stability: Monumented
Setting/Monument Type: Brass Disk
Owner: USACE
GPS Suitable: (•) Yes ( ) No
Obstructions: [ ] N [ ] E [ ] S [ ] W
Magnetic: (•) Yes ( ) No

- Horizontal -
Datum: NAD83 (2011)
Lat: 42 6 14.49030 N
Lon: 87 53 14.08454 W
Local Accuracy: 2-cm
NSRS Accuracy: 2-cm
Survey/Computation Method:
OPUS-RS
Date Observed: 08/21/2015

- Vertical -
Datum: NAVD88 ( )
Elevation Ht: 640.694 Ft
Ellip Ht:
Local Accuracy: 5-cm
NSRS Accuracy: 5-cm
Survey/Computation Method:
OPUS-RS
Date Observed: 08/21/2015 Geoid12B

Access:

- Tidal/Hydraulic Gage Relationships -
Owner: Gage ID: - Elevation - - Datum - Epoch:

Description/Comments:
Mark is a USACE disk set in concrete island at the intersection of S. Milwaukee Ave. (US-45) and N. River Rd.

Zu: 1201 N1: 1,980,813.42 USFT E1: 1,105,304.74 USFT UTM Zu1: 16 N1: 15,294,283.62 USFT E1: 1,398,734.47 USFT
Zu2: N2: USFT E2: USFT UTM Zu2: N2: USFT E2: USFT

- Horizon/Setup View -

- Close-Up View-

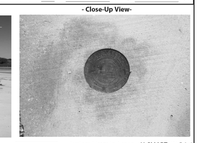

Required Fields In Red Submit System Fields in Green U-SMART ver 5.1.4 JAN 2015

USACE Survey Monument Archival & Retrieval Tool Datasheet Type: Read-Only

Designation: CP 12
Project: Levee 37
Stamping: N/A
PID NGS: COE: AF11902
State: Illinois
County:
District: Chicago
Nearest Town: Prospect Heights
USGS Quad:
T.R.S.:
Nearest Hwy/Mi: US-45
Date Recovered: 08/21/2015
By: USACE
Condition/Stability: Good
Setting/Monument Type: Mag Nail
Owner: USACE
GPS Suitable: (•) Yes ( ) No
Obstructions: [ ] N [ ] E [ ] S [ ] W
Magnetic: ( ) Yes (•) No

- Horizontal -
Datum: NAD83 (2011)
Lat: 42 6 26.71431 N
Lon: 87 53 24.13180 W
Local Accuracy: 2-cm
NSRS Accuracy: 2-cm
Survey/Computation Method:
OPUS-RS
Date Observed: 08/21/2015

- Vertical -
Datum: NAVD88 ( )
Elevation Ht: 637.282 Ft
Ellip Ht:
Local Accuracy: 5-cm
NSRS Accuracy: 5-cm
Survey/Computation Method:
OPUS-RS
Date Observed: 08/21/2015 Geoid12B

Access:

- Tidal/Hydraulic Gage Relationships -
Owner: Gage ID: - Elevation - - Datum - Epoch:

Description/Comments:
Mark is a mag nail set at the north end of an asphalt parking lot, near the SW corner of the intersection of S. Milwaukee Ave. (US-45) and Palatine Frontage Rd.

Zu: 1201 N1: 1,982,253.37 USFT E1: 1,104,541.39 USFT UTM Zu1: 16 N1: 15,295,734.83 USFT E1: 1,398,995.92 USFT
Zu2: N2: USFT E2: USFT UTM Zu2: N2: USFT E2: USFT

- Horizon/Setup View -

- Close-Up View-

Required Fields In Red Submit System Fields in Green U-SMART ver 5.1.4 JAN 2015

US Army Corps of Engineers
Chicago District

MARK	DESCRIPTION	TRACKING NO.	ACTION	DATE

MARK	DESCRIPTION	TRACKING NO.	ACTION	DATE

U.S. ARMY CORPS OF ENGINEERS
CHICAGO DISTRICT
CHICAGO, IL 60604

DESIGNED BY: LAURA VANDEN BERG, P.E.
DWN BY: LCV
CKD BY: AGT
SUBMITTED BY: JOHN GRUBOSKI, P.E.
PLOT SCALE:
PLOT DATE:
SIZE: ANSI D
FILE NAME: $FILENAME
DATE: 30 SEPT 2016
SOLICITATION NO.: W912P8-16-R-0001
CONTRACT NO.: W912P8-16-C-0011
FILE NUMBER:
STATUS:

DES PLAINES RIVER
LEVEE 37
MILWAUKEE AVE. STRUCTURE

SURVEY CONTROL POINTS AND BENCHMARKS

SHEET IDENTIFICATION
V-001

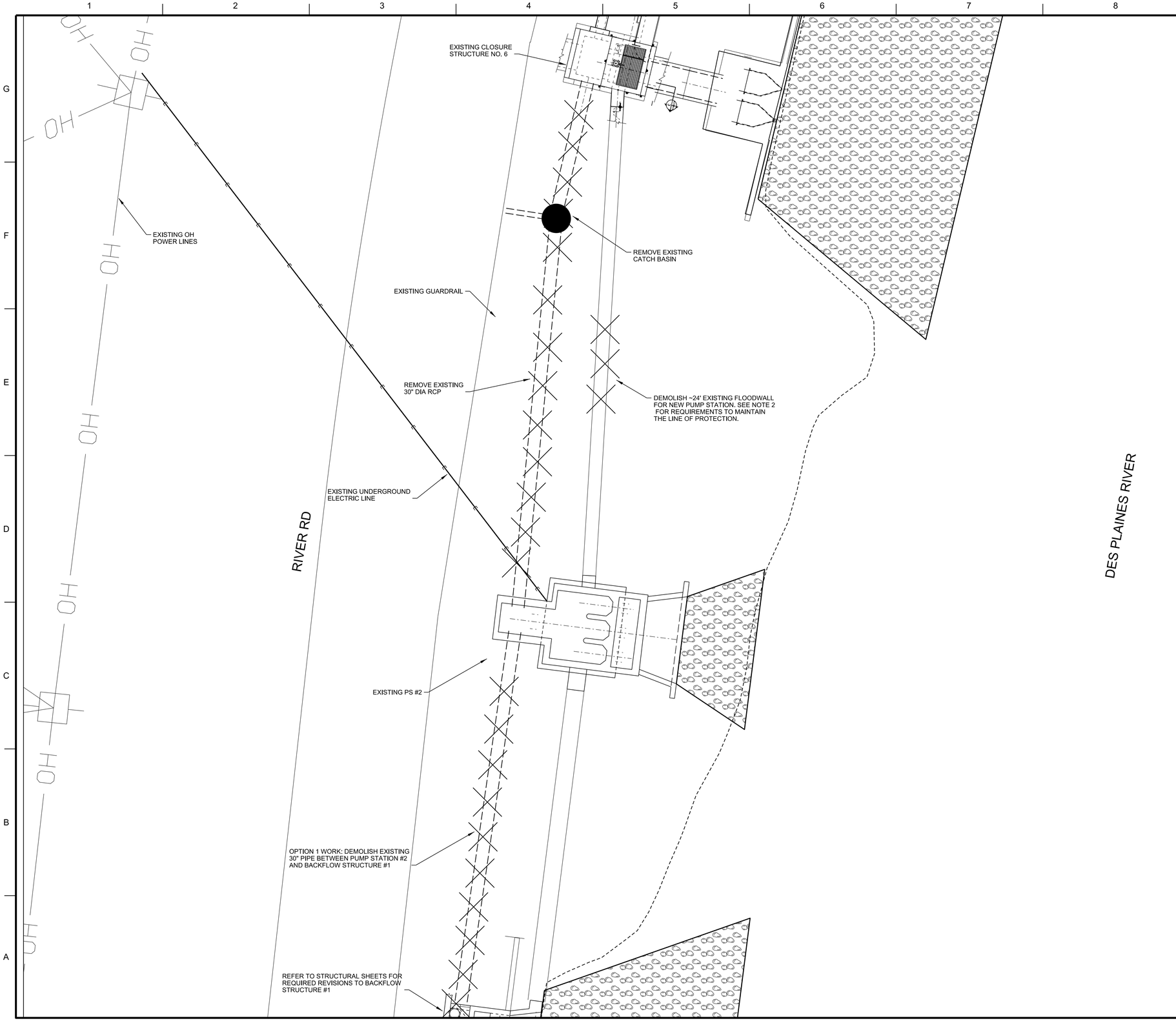

GENERAL NOTES

1. REFER TO SPECIFICATION SECTION 02 41 00 FOR DETAILS OF DEMOLITION.

2. CONTRACTOR MUST MAINTAIN THE FLOODWALL LINE OF PROTECTION DURING THE ENTIRETY OF CONSTRUCTION. REFER TO SPECIFICATION SECTION 31 23 19 FOR COFFERDAM REQUIREMENTS. FOR PERMITTING RESTRICTIONS ON THE COFFERDAM, REFER TO SPECIFICATION 01 57 20.01 03 PARAGRAPH 3.1. THE LOCATION OF THE COFFERDAM MUST BE NO MORE THAN 15' BEYOND THE WALLS OF THE PROPOSED PUMP STATION.

US Army Corps of Engineers®

MARK	DESCRIPTION	DATE

DESIGNED BY:	ISSUE DATE: 12/2018
DRAWN BY:	SOLICITATION NO.: W912P6-19-B-00XX
CHECKED BY:	CONTRACT NO.: W912P6-19-C-00XX
SUBMITTED BY:	PROJECT ID: PROJECT ID
SIZE: ANSI D	FILE NAME: 113244_CD101.dgn

U.S. ARMY CORPS OF ENGINEERS
CHICAGO DISTRICT
231 S. LASALLE ST. SUITE 1500
CHICAGO, ILLINOIS 60604

UPPER DES PLAINES RIVER
LEVEE 37 - PUMP STATION UPGRADE
MOUNT PROSPECT, ILLINOIS

DEMOLITION SITE PLAN

SHEET ID

CD101

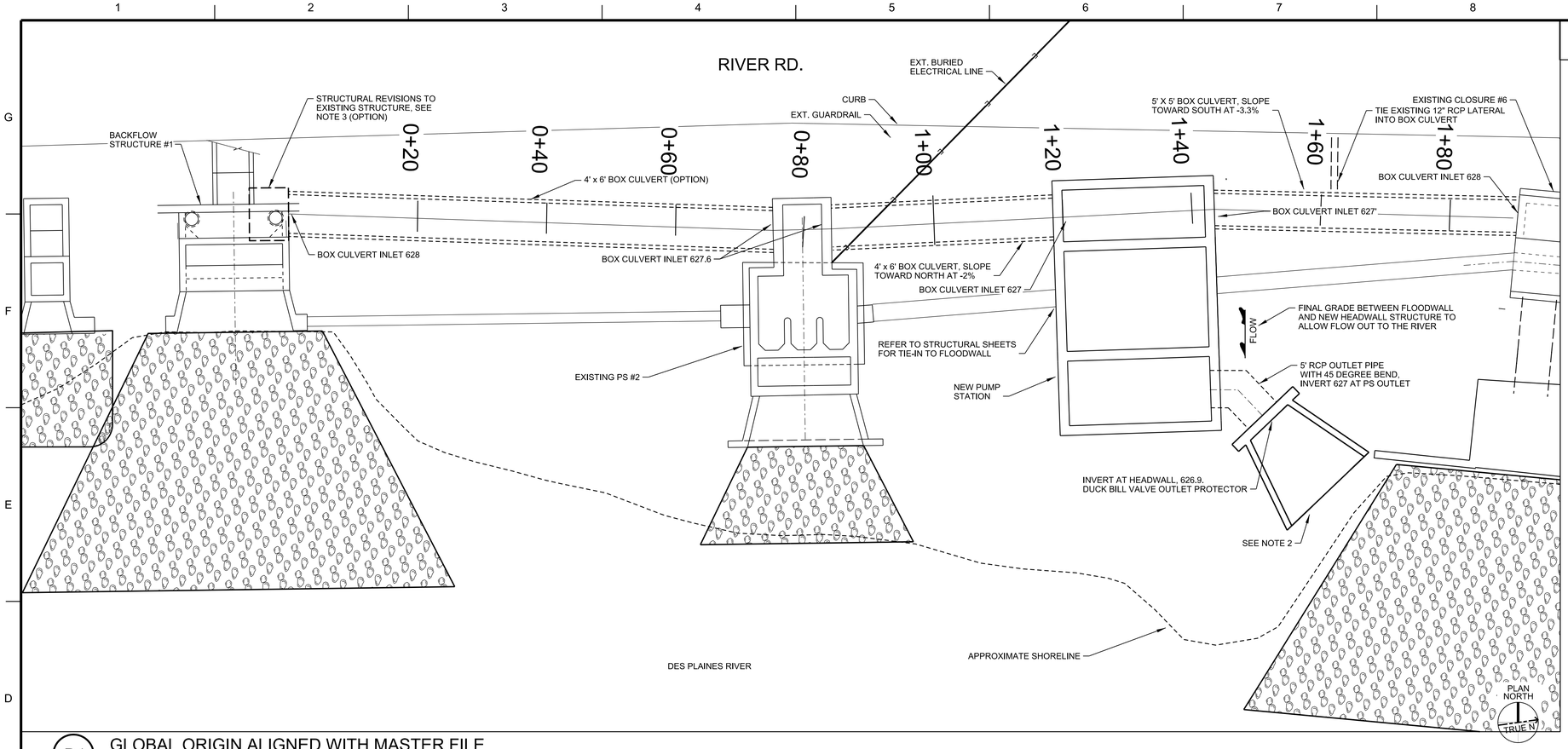

D1 GLOBAL ORIGIN ALIGNED WITH MASTER FILE

SCALE: 1" = 10'

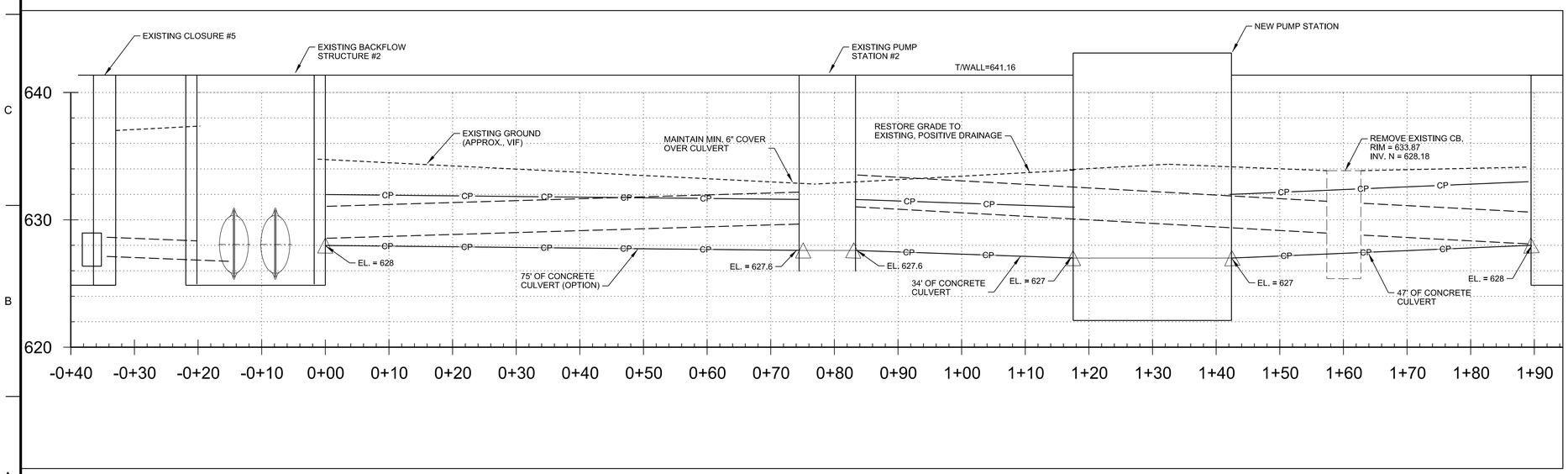

A1 PROFILE VIEW

HORIZONTAL SCALE: 1" = 10'; VERTICAL SCALE: 1" = 5'

0 20' 40'

GENERAL NOTES

1. EXISTING GUARDRAIL IN WORK AREA MAY BE REMOVED AS NECESSARY TO COMPLETE THE WORK PROVIDING PROPER PERMITS ARE RECEIVED FROM IDOT. IT MUST BE REINSTALLED IN KIND AT THE COMPLETION OF THE WORK. SEE SHEET C-501 FOR DETAILS.

2. PLACE RIPRAP AT HEADWALL APRON OUTLET PER SPECIFICATION 31 37 16.00 03.

3. REFER TO SHEETS S-508 AND S-509 FOR DETAILS OF THE STRUCTURAL REVISIONS TO EXISTING BACKFLOW STRUCTURE #1.

4. B/SHEET PILE IS AT EL 612.00 FROM CLOSURE #5 THROUGH CLOSURE #6.

US Army Corps of Engineers®

MARK	DESCRIPTION	DATE

DESIGNED BY:
DRAWN BY:
CHECKED BY:
SUBMITTED BY:
SIZE:
ISSUE DATE: 12/2018
SOLICITATION NO.: W912P6-19-B-00XX
CONTRACT NO.: W912P6-19-C-00XX
PROJECT ID:
PROJECT ID
FILE NAME: 113244_C-101.dgn

U.S. ARMY CORPS OF ENGINEERS
CHICAGO DISTRICT
231 S. LASALLE ST. SUITE 1500
CHICAGO, ILLINOIS 60604

UPPER DES PLAINES RIVER
LEVEE 37 - PUMP STATION UPGRADE
MOUNT PROSPECT, ILLINOIS

PUMP STATION AND NEW CULVERTS
PLAN VIEW

SHEET ID

C-101

...\Levee 37_Pump Station Upgrade Project-113244\40 - Geospatial Data\Drawings\CAD_BIM_Sheets\CIVIL PLAN VIEW
4:19:08 PM 1/23/2020 PD: AEC_pdf.pltcfg DS: AEC_Screen.dscript

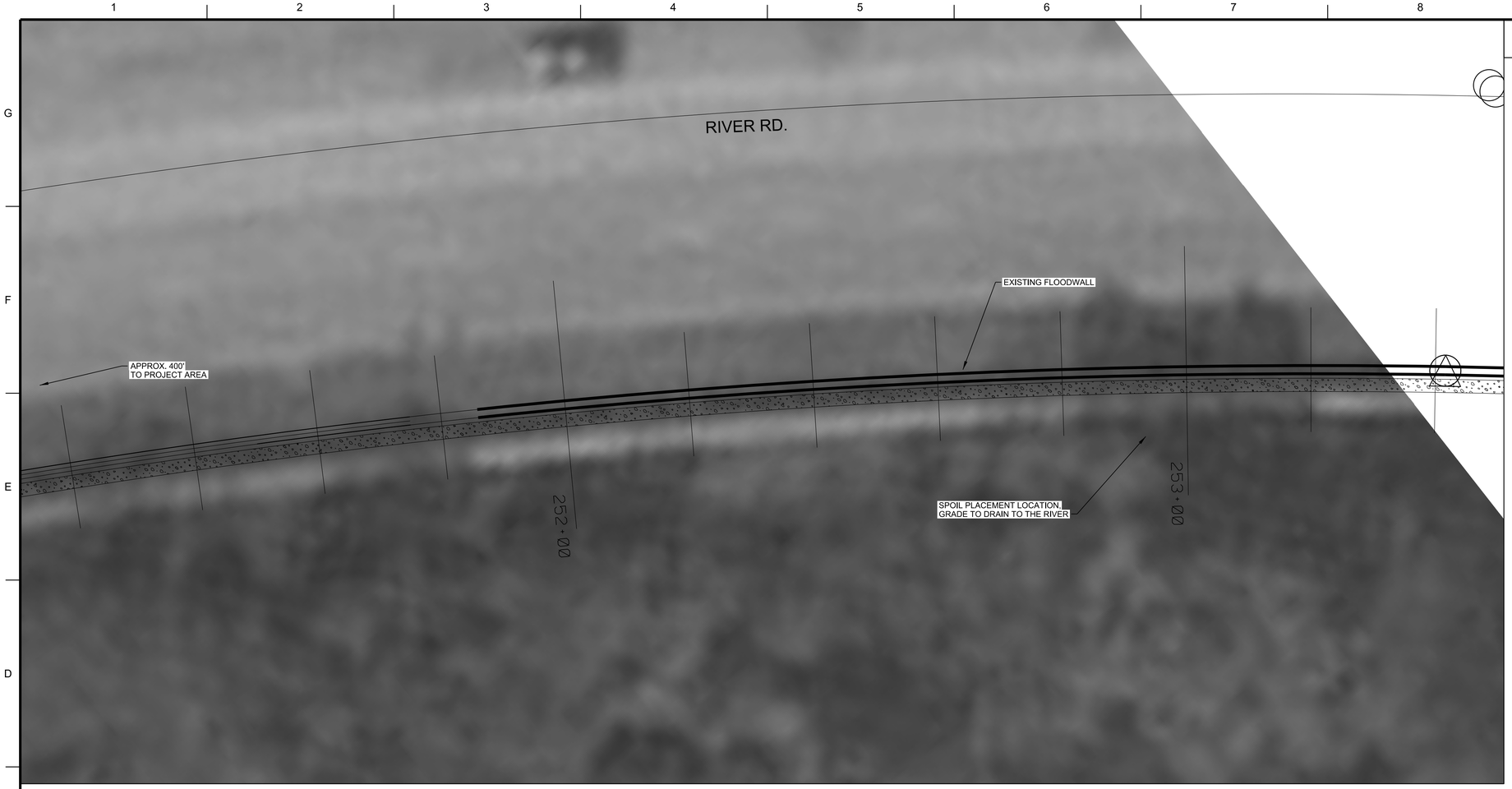

PLAN NORTH
TRUE N

C1 GLOBAL ORIGIN ALIGNED WITH MASTER FILE
SCALE: 1" = 10'

0 10' 20'

GENERAL NOTES

1. SPOIL LOCATION IS APPROXIMATELY 550' NORTH OF THE WORK AREA ALONG THE EXISTING FLOODWALL, AT THE EXISTING LOW SPOT. COORDINATE EXACT LOCATION WITH COR.

2. PLACE ANY EXCESS OR UNSUITABLE SOIL IN THE LOCATION SHOWN PER SPECIFICATION SECTION 31 11 00, TO FILL THE EXISTING LOW SPOT ADJACENT TO THE FLOODWALL. GRADE TO DRAIN TO THE DES PLAINES RIVER.

2. ANY SOIL PLACED MUST BE STABILIZED IN ACCORDANCE WITH SECTION 32 92 19 SEEDING.

3. STATIONING SHOWN IS FOR AS-BUILT FLOODWALL, REFER TO REFERENCE SHEETS TO VERIFY LOCATION.

US Army Corps of Engineers®

MARK	DESCRIPTION	DATE

DESIGNED BY: | ISSUE DATE: 12/2018
DRAWN BY: | SOLICITATION NO.: W912P6-19-B-00XX
CHECKED BY: | CONTRACT NO.: W912P6-19-C-00XX
SUBMITTED BY: | PROJECT ID:
SIZE: | FILE NAME: 113244_C-102.dgn | PROJECT ID:

U.S. ARMY CORPS OF ENGINEERS
CHICAGO DISTRICT
231 S. LASALLE ST., SUITE 1500
CHICAGO, ILLINOIS 60604

UPPER DES PLAINES RIVER
LEVEE 37 - PUMP STATION UPGRADE
MOUNT PROSPECT, ILLINOIS

PLAN VIEW

SHEET ID
C-102

...\Levee 37_Pump Station Upgrade Project-113244\40 - Geospatial Data\Drawings\CAD_BIM_Sheets\SOIL DISPOSAL LOCATION
4:29:26 PM 1/23/2020 PD: AEC_pdf.pltcfg DS: AEC_Screen.dscript

1 2 3 4 5 6 7 8 9 10

G F E D C B A

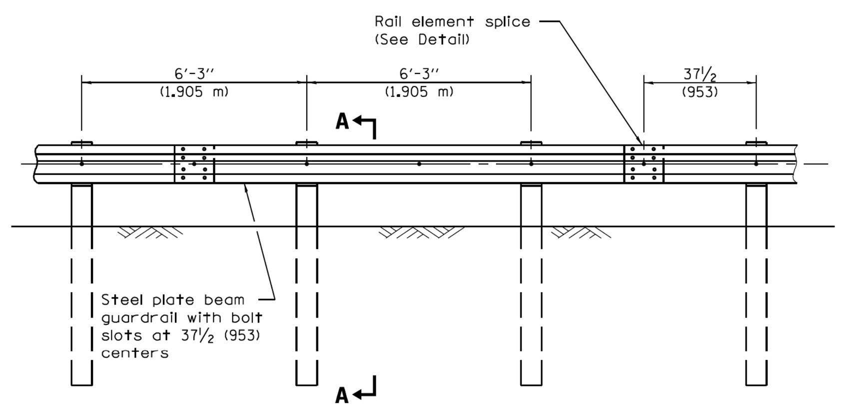

ELEVATION

TYPE A

6'-3" (1.905 m) Typical post spacing

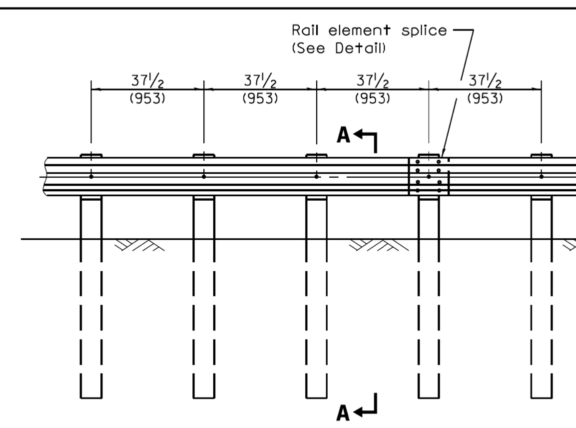

ELEVATION

TYPE B

37½ (953) Closed post spacing

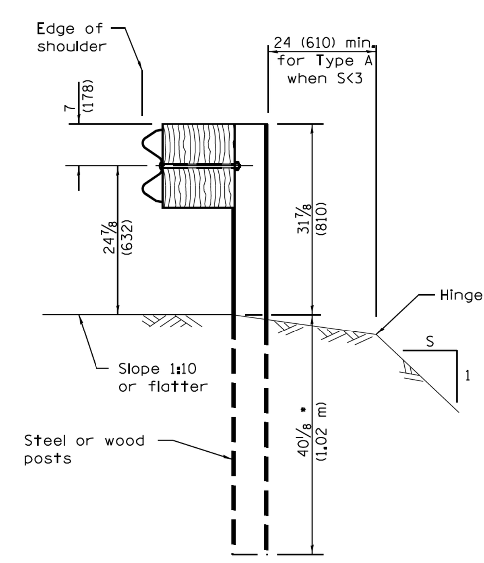

SECTION A–A

• When "S" is less than 3 and the distance from the back of post is less than 24 (610), the post shall be steel and the embedment shall be 76⅛ (1.93 m) and the minimum top of rail height shall be 31 (787).

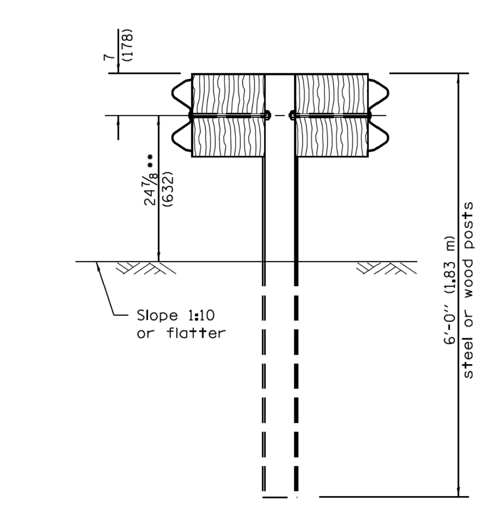

SECTION B–B

•• When connecting Type D guardrail to an impact attenuator, adjust this dimension to match over a distance of 25'-0" (7.62 m) from point of connection if necessary.

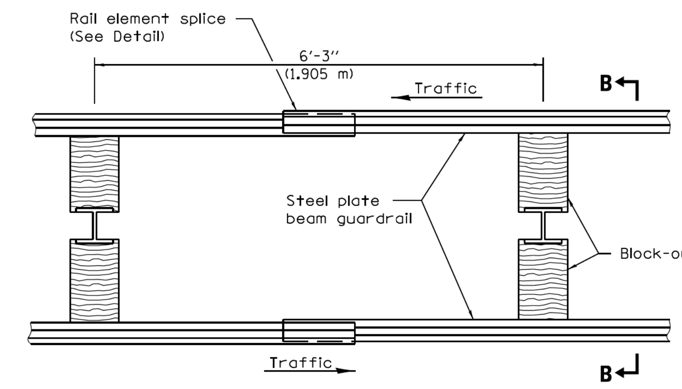

PLAN

TYPE D

Double steel plate beam guardrail
6'-3" (1.905 m) typical post spacing

GENERAL NOTES

All slope ratios are expressed as units of vertical displacement to units of horizontal displacement (V:H).

All dimensions are in inches (millimeters) unless otherwise shown.

Illinois Department of Transportation
PASSED January 1, 2017 — ENGINEER OF POLICY AND PROCEDURES
APPROVED January 1, 2017 — ENGINEER OF DESIGN AND ENVIRONMENT
ISSUED 1-1-97

DATE	REVISIONS
1-1-17	Added detail for leave-out.
	Rev. 'D' to less than 6 (150)
	for guardrail behind curb.
1-1-12	Added req. for 9 ft. posts
	to be steel. Modified set
	back of g'rail behind curb.

STEEL PLATE BEAM GUARDRAIL

(Sheet 1 of 4)

STANDARD 630001-11

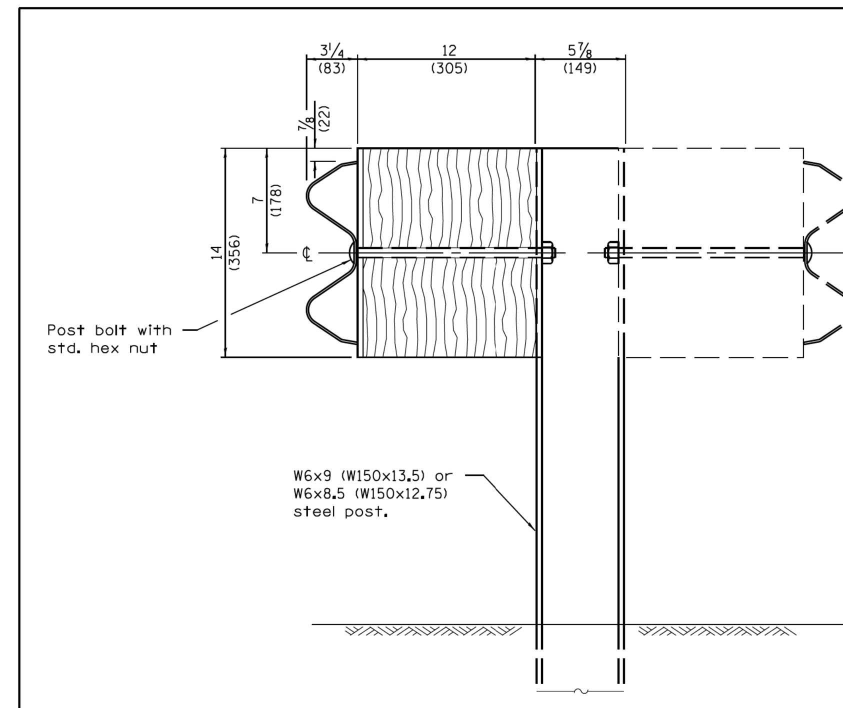

STEEL POST CONSTRUCTION

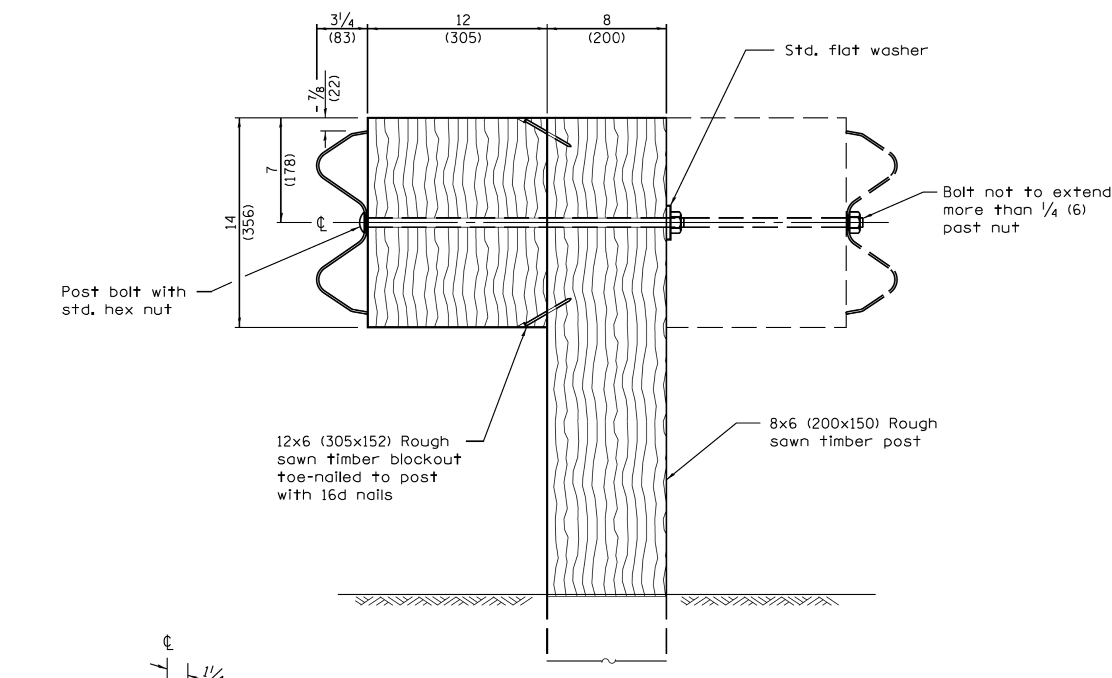

WOOD POST CONSTRUCTION

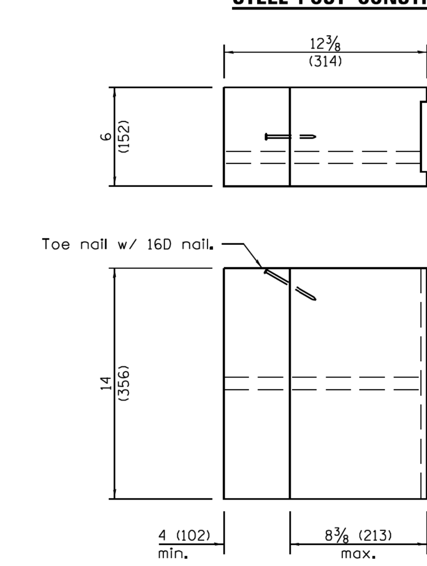

TWO–PIECE WOOD BLOCKOUT OPTION

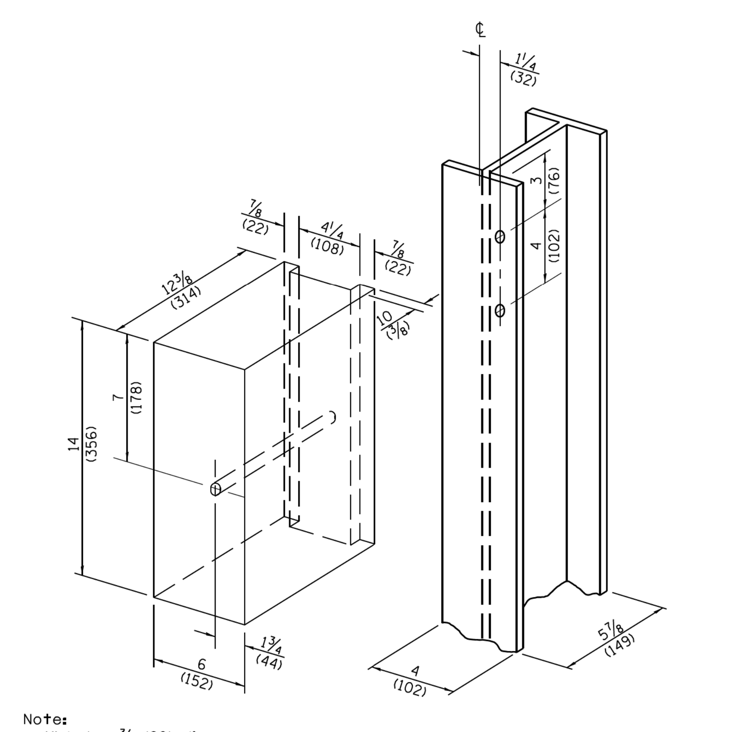

Note:
All holes ¾ (20) dia.

WOOD BLOCK–OUT AND STEEL POST DETAILS

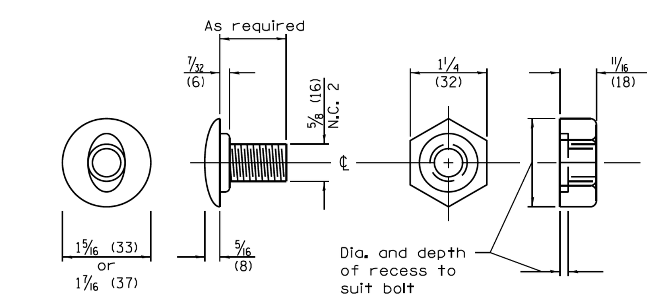

POST OR SPLICE BOLT & NUT

Illinois Department of Transportation
PASSED January 1, 2017 — ENGINEER OF POLICY AND PROCEDURES
APPROVED January 1, 2017 — ENGINEER OF DESIGN AND ENVIRONMENT
ISSUED 1-1-97

STEEL PLATE BEAM GUARDRAIL

(Sheet 2 of 4)

STANDARD 630001-11

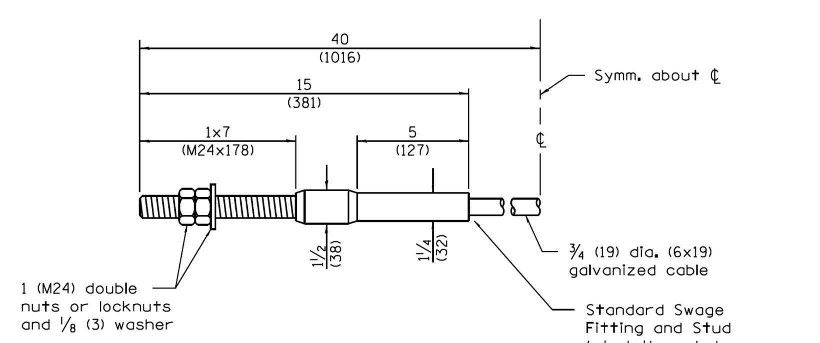

CABLE ASSEMBLY

(42,800 lbs. (190 kN) min. breaking strength)
Tighten to taut tension.

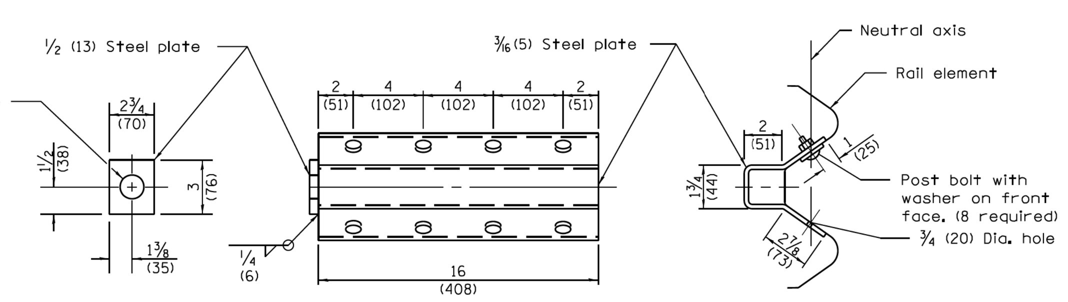

NOTE
Anchor plate T shall be used to attach cable assembly to guardrail when required on traffic barrier terminals.

ANCHOR PLATE T DETAILS

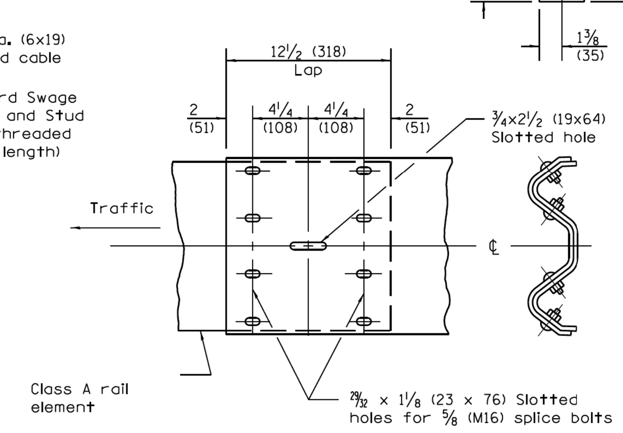

RAIL ELEMENT SPLICE

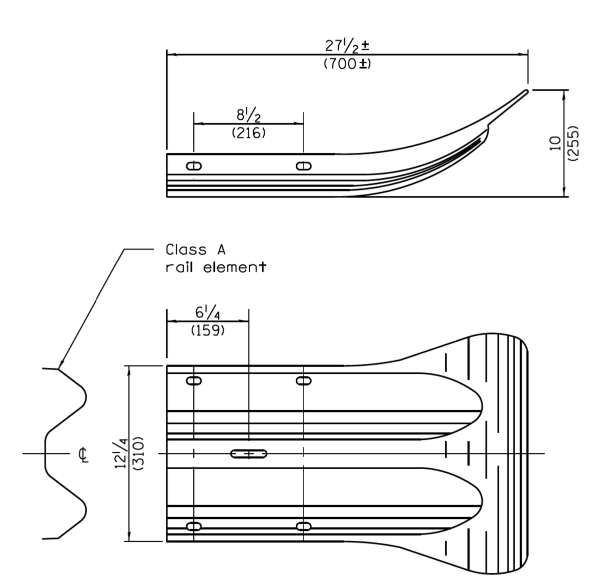

END SECTION

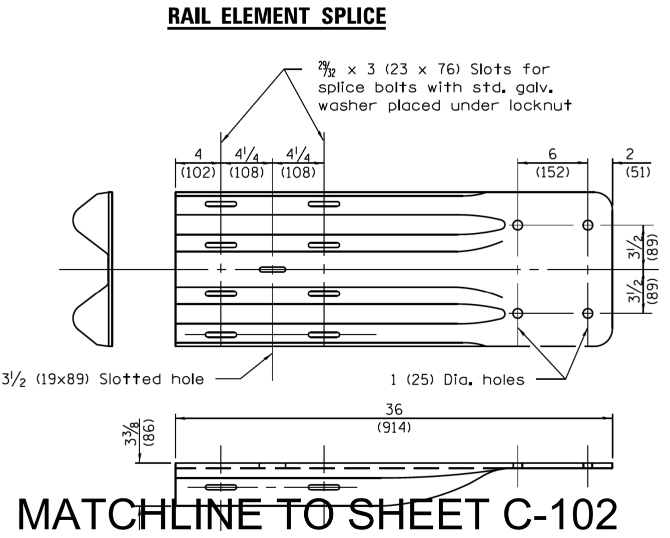

MATCHLINE TO SHEET C-102

NOTE
When end shoe is attached to a bridge parapet which has an expansion joint, the bolts shall be provided with a locknut or double nut and shall be tightened only to a point that will allow guardrail movement.

The standard end shoe shall be attached to the concrete with pre-drilled or self-drilling anchor bolts. The anchor cone shall be set flush with the surface of the concrete.

Externally threaded studs protruding from the surface of the concrete will not be permitted.

END SHOE

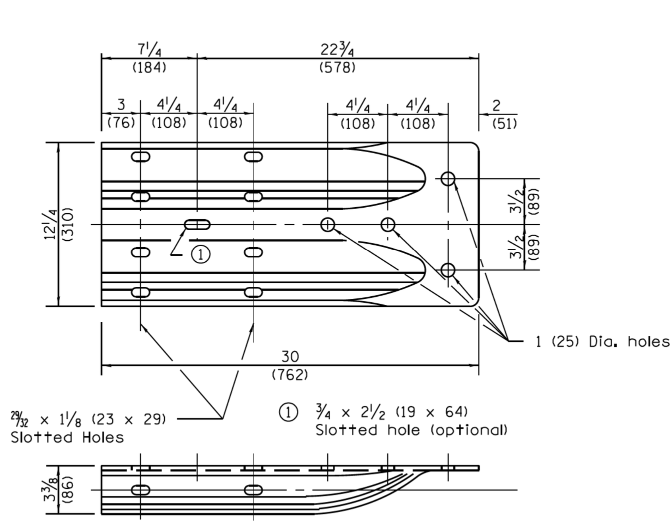

ALTERNATE END SHOE

Illinois Department of Transportation
PASSED January 1, 2017 — ENGINEER OF POLICY AND PROCEDURES
APPROVED January 1, 2017 — ENGINEER OF DESIGN AND ENVIRONMENT
ISSUED 1-1-97

STEEL PLATE BEAM GUARDRAIL

(Sheet 3 of 4)

STANDARD 630001-11

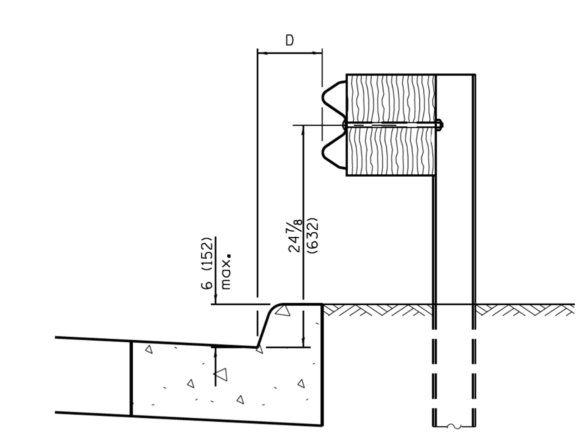

0 ≤ D < 6 (150 m)

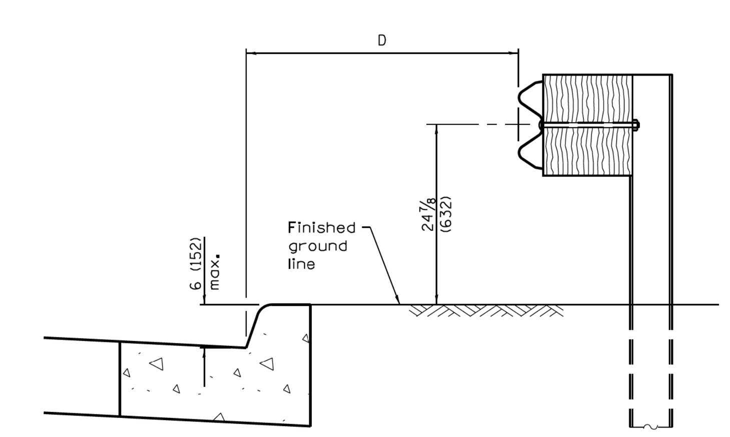

4'–0" (1.2 m) ≤ D ≤ 12'–0" (3.7 m)

GUARDRAIL PLACED BEHIND CURB

Note: 'D' shall not exceed 6 (152) for design speeds greater than 45 mph.

V	W	L	
		Steel Post	Wood Post
0 - 6 (0 - 152)	24 (610)	21 (530)	23 (580)
> 6 - 18 (> 152 - 458)	18 (458)	14½ (368)	16½ (419)
> 18 - 31 (> 458 - 787)	12 (305)	8 (203)	10 (250)
> 31 - 40⅛ (> 787 - 1.02 m)	12 - 0 (305 - 0)	8 (203)	10 (250)

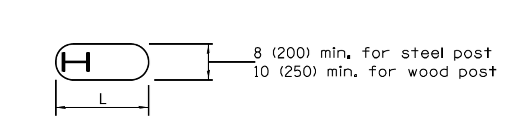

PLAN

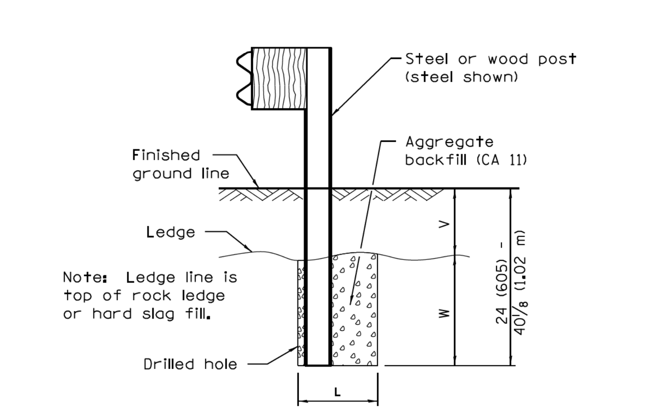

ELEVATION

FOOTING FOR POST WHEN IMPERVIOUS MATERIAL IS ENCOUNTERED

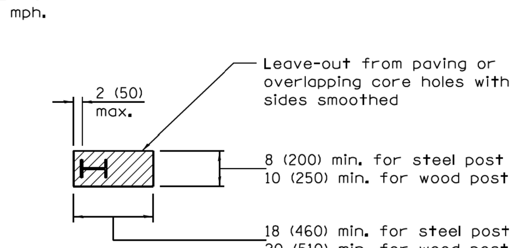

PLAN

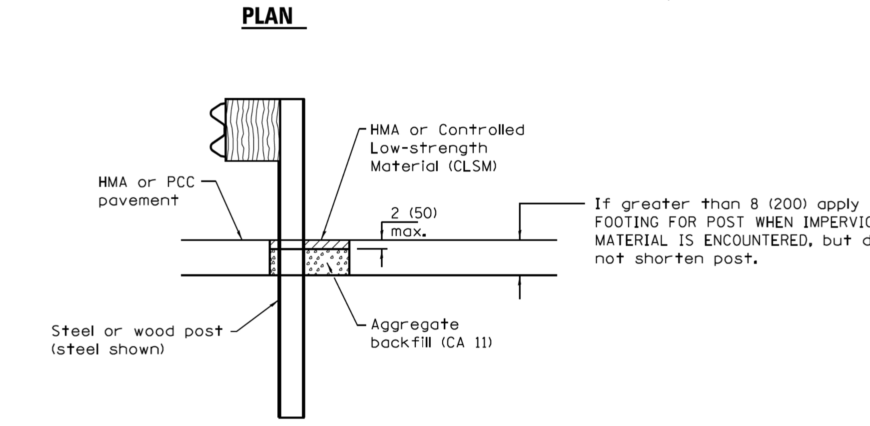

ELEVATION

LEAVE–OUT FOR POST WHEN PAVED MATERIAL IS ENCOUNTERED

Illinois Department of Transportation
PASSED January 1, 2017 — ENGINEER OF POLICY AND PROCEDURES
APPROVED January 1, 2017 — ENGINEER OF DESIGN AND ENVIRONMENT
ISSUED 1-1-97

STEEL PLATE BEAM GUARDRAIL

(Sheet 4 of 4)

STANDARD 630001-11

US Army Corps of Engineers®

MARK	DESCRIPTION	DATE

ISSUE DATE: 12/2018
SOLICITATION NO.: W912P6-19-B-00XX
CONTRACT NO.: W912P6-19-C-00XX
PROJECT ID: PROJECT ID
DESIGNED BY:
DRAWN BY:
CHECKED BY:
SUBMITTED BY:
SIZE:
FILE NAME: 113244 C-501.dgn

U.S. ARMY CORPS OF ENGINEERS
CHICAGO DISTRICT
231 S. LASALLE ST, SUITE 1500
CHICAGO, ILLINOIS 60604

UPPER DES PLAINES RIVER
LEVEE 37 - PUMP STATION UPGRADE
MOUNT PROSPECT, ILLINOIS

PUMP STATION AND NEW CULVERTS
PLAN VIEW

SHEET ID
C-501

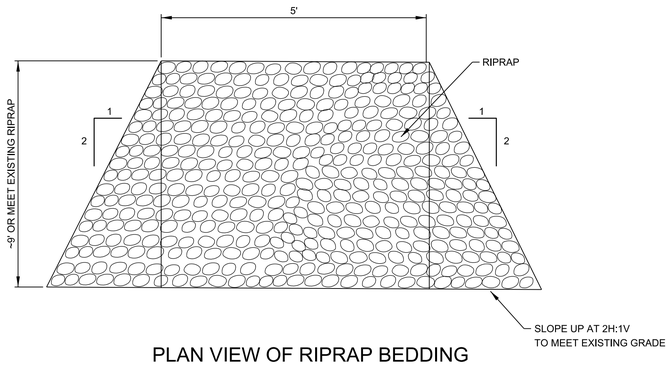

PLAN VIEW OF RIPRAP BEDDING

N.T.S.

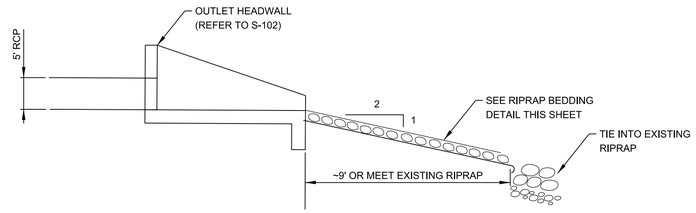

ELEVATION VIEW OF RIPRAP BEDDING

N.T.S.

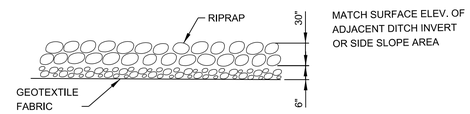

ELEVATION VIEW OF RIPRAP BEDDING

N.T.S.

GENERAL NOTES

1. RIPRAP WILL BE 30" RR-5 WITH 6" CA-2 BEDDING STONE. SEE SPECIFICATION SECTION 31 37 16.00 03.

2. NEW RIPRAP WILL BE WORKED INTO AND SUPPLEMENT THE EXISTING RIPRAP EROSION PROTECTION AT THE PUMP STATION 2 AND CLOSURE 6 OUTLETS. WORK WITH COR IN FIELD TO VERIFY PLACEMENT LOCATION OF THE PROPOSED RIPRAP QUANTITY.

US Army Corps of Engineers®

MARK	DESCRIPTION	DATE

DESIGNED BY:
DRAWN BY:
CHECKED BY:
SUBMITTED BY:
SIZE:
ISSUE DATE: 12/2018
SOLICITATION NO.: W912P6-19-B-00XX
CONTRACT NO.: W912P6-19-C-00XX
PROJECT ID: PROJECT ID
FILE NAME: 113244_C-502.dgn

U.S. ARMY CORPS OF ENGINEERS
CHICAGO DISTRICT
231 S. LASALLE ST. SUITE 1500
CHICAGO, ILLINOIS 60604

UPPER DES PLAINES RIVER
LEVEE 37 - PUMP STATION UPGRADE
MOUNT PROSPECT, ILLINOIS

PUMP STATION AND NEW CULVERTS
PLAN VIEW

SHEET ID

C-502

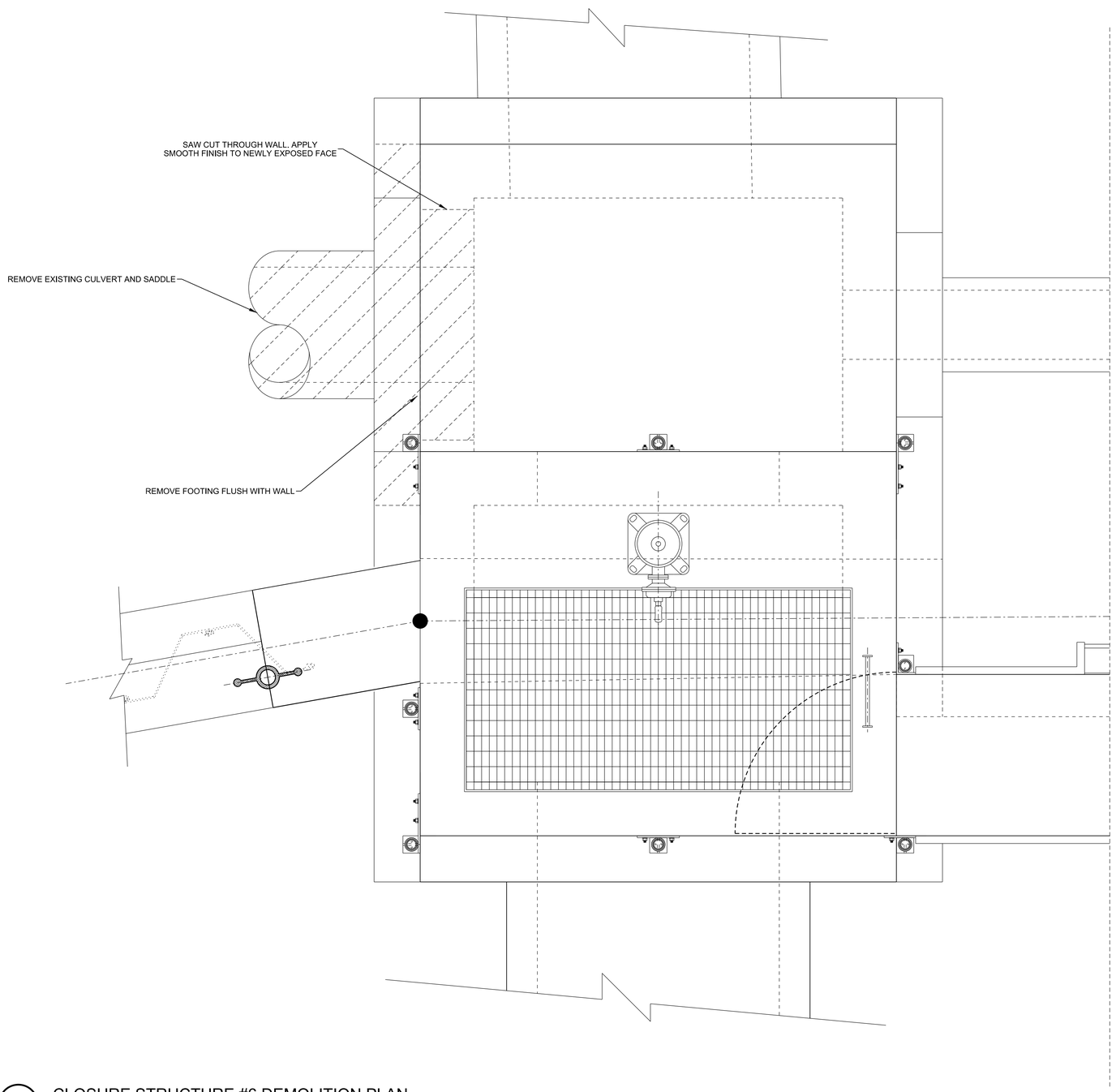

A2 CLOSURE STRUCTURE #6 DEMOLITION PLAN

SCALE: 3/4" = 1'

0 1' 2' 4'

US Army Corps of Engineers®

MARK	DESCRIPTION	DATE

DESIGNED BY: JEREMY HARRIS
DRAWN BY: JH
CHECKED BY:
SUBMITTED BY:
FAYE LEFFLER P.E.
SIZE:

ISSUE DATE: 12/20/18
SOLICITATION NO.: W912P6-19-B-00XX
CONTRACT NO.: W912P6-19-C-00XX
PROJECT ID:
PROJECT ID
FILE NAME: 113244_SD101.dgn

U.S. ARMY CORPS OF ENGINEERS
CHICAGO DISTRICT
231 S. LASALLE ST., SUITE 1500
CHICAGO, ILLINOIS 60604

UPPER DES PLAINES RIVER
LEVEE 37 - PUMP STATION UPGRADE
MOUNT PROSPECT, ILLINOIS

CLOSURE STRUCTURE #6
DEMOLITION PLAN

SHEET ID

SD101

...\Levee 37_Pump Station Upgrade Project-113244\40 - Geospatial Data\Drawings\CAD_BIM_Sheets\Sheet File - Structural - Struct
12:17:13 PM 3/5/2020 PD: AEC_pdf.pltcfg DS: AEC_Screen.dscript

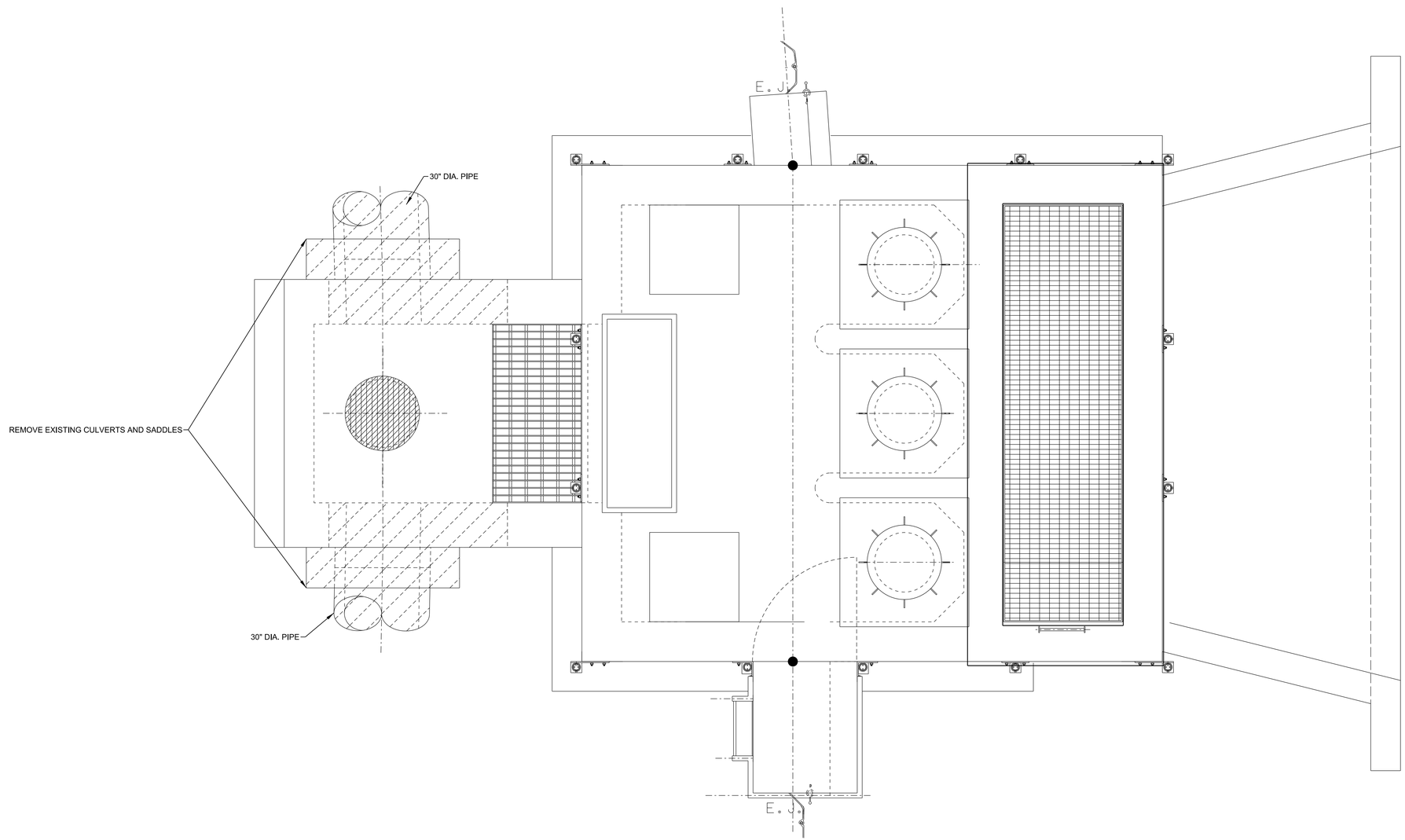

A2 PUMP STATION #2 DEMOLITION PLAN

SCALE: 1/2" = 1'

PLAN NORTH
TRUE N

0 1' 2' 4'

US Army Corps of Engineers®

MARK	DESCRIPTION	DATE

DESIGNED BY: JEREMY HARRIS
DRAWN BY: JH
CHECKED BY:
SUBMITTED BY:
FAYE LEFTLER, PME.
SIZE:
ISSUE DATE: 12/20/18
SOLICITATION NO.: W912P6-19-B-00XX
CONTRACT NO.: W912P6-19-C-00XX
PROJECT ID: PROJECT ID
FILE NAME: 113244_SD102.dgn

U.S. ARMY CORPS OF ENGINEERS
CHICAGO DISTRICT
231 S. LASALLE ST., SUITE 1500
CHICAGO, ILLINOIS 60604

UPPER DES PLAINES RIVER
LEVEE 37 - PUMP STATION UPGRADE
MOUNT PROSPECT, ILLINOIS

PUMP STATION #2
DEMOLITION PLAN

SHEET ID

SD102

...\Levee 37_Pump Station Upgrade Project-113244\40 - Geospatial Data\Drawings\CAD_BIM_Sheets\Sheet File - Structural - Struct
9:14:40 AM 3/6/2020 PD: AEC_pdf.pltcfg DS: AEC_Screen.dscript

GENERAL NOTES

1. SAWCUT CONCRETE TO FULL DEPTH AND CUT SHEETPILE TO CUT LINE SHOWN.
2. REMOVE AND DISPOSE OF EXISTING HANDRAIL WITHIN FLOODWALL REMOVAL EXTENT.

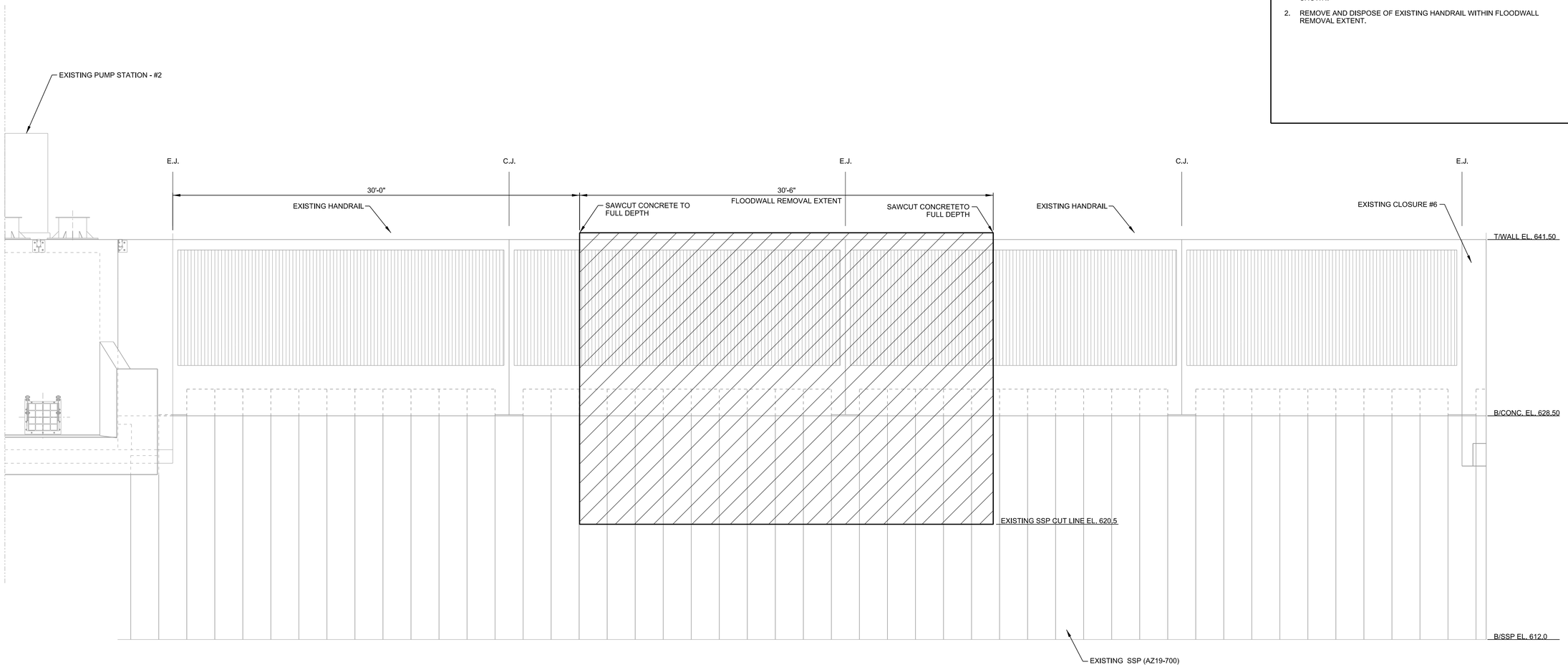

B1 FLOODWALL DEMOLITION

SCALE: 1/4" = 1'

0 2' 4' 8'

US Army Corps of Engineers®

MARK	DESCRIPTION	DATE

DESIGNED BY: KATHY SITKO
DRAWN BY: KPC
CHECKED BY: FL
SUBMITTED BY: FAYE LEFTLER
SIZE: ANSI D
FILE NAME: 113244_SD-201.dgn
ISSUE DATE: 12/2018
SOLICITATION NO.: W912P6-19-B-00XX
CONTRACT NO.: W912P6-19-C-00XX
PROJECT ID:
PROJECT ID

U.S. ARMY CORPS OF ENGINEERS
CHICAGO DISTRICT
231 S. LASALLE ST. SUITE 1500
CHICAGO, ILLINOIS 60604

UPPER DES PLAINES RIVER
LEVEE 37 - PUMP STATION UPGRADE
MOUNT PROSPECT, ILLINOIS

BACKFLOW STRUCTURE 1 DEMOLITION

SHEET ID

SD-201

...\Levee 37_Pump Station Upgrade Project-113244\40 - Geospatial Data\Drawings\CAD_BIM_Sheets\113244_SD-201.dgn
11:29:14 AM 1/28/2020 PD: AEC_pdf.pltcfg DS: AEC_Screen.dscript

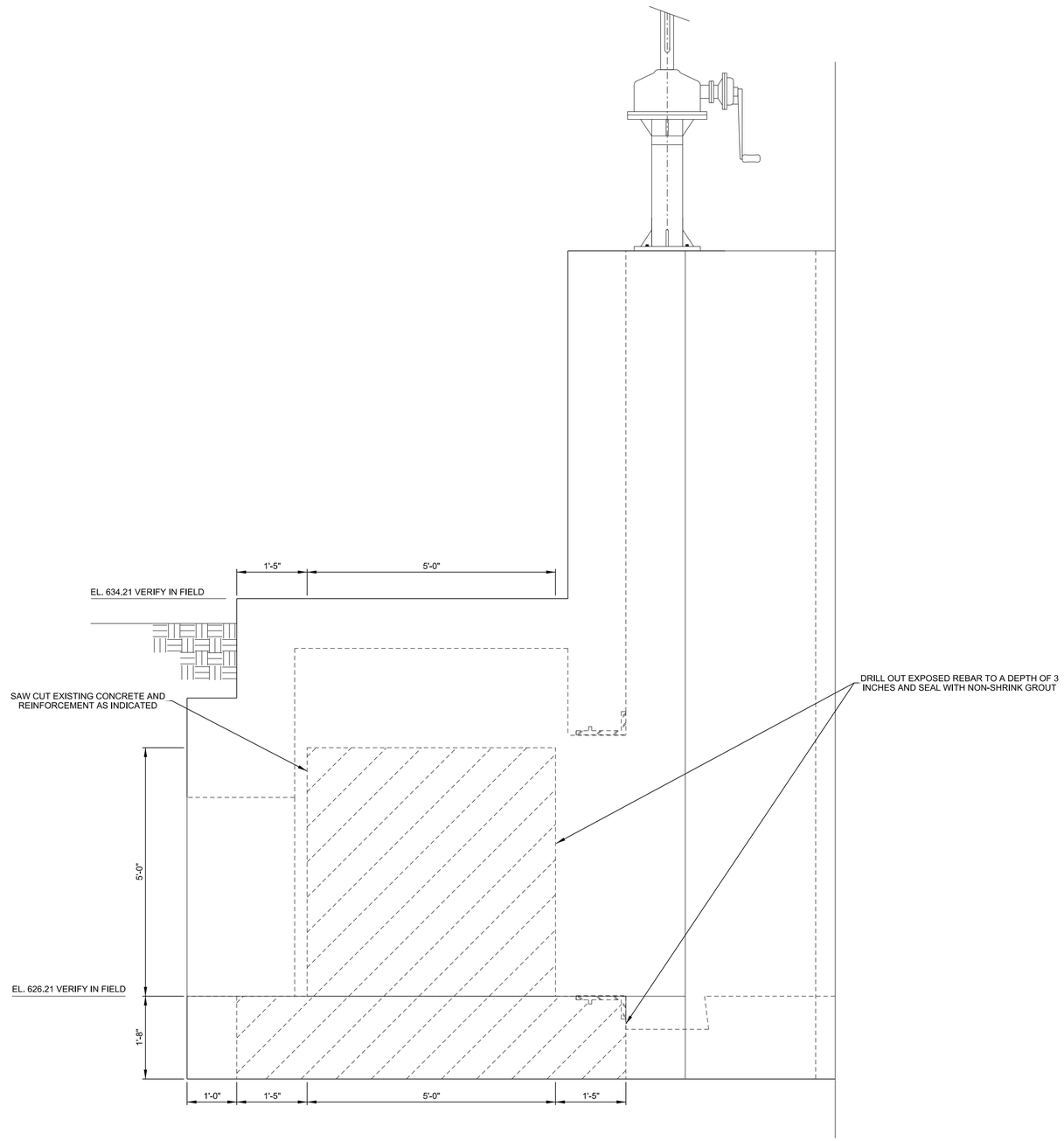

A3 CLOSURE STRUCTUR #6 DEMOLITION ELEVATION

SCALE: 3/4" = 1'

0 1' 2' 4'

US Army Corps of Engineers®

MARK	DESCRIPTION	DATE

DESIGNED BY: JEREMY HARRIS
DRAWN BY: JH
CHECKED BY:
SUBMITTED BY: FAYE LEFTLER
SIZE: FILE NAME: 113244_SD202.dgn
ISSUE DATE: 12/20/18
SOLICITATION NO.: W912P6-19-B-00XX
CONTRACT NO.: W912P6-19-C-00XX
PROJECT ID:
PROJECT ID

U.S. ARMY CORPS OF ENGINEERS
CHICAGO DISTRICT
231 S. LASALLE ST. SUITE 1500
CHICAGO, ILLINOIS 60604

UPPER DES PLAINES RIVER
LEVEE 37 - PUMP STATION UPGRADE
MOUNT PROSPECT, ILLINOIS

CLOSURE STRUCTURE #6
DEMOLITION ELEVATION

SHEET ID

SD202

...\Levee 37_Pump Station Upgrade Project-113244\40 - Geospatial Data\Drawings\CAD_BIM_Sheets\Sheet File - Structural - Struct
12:20:27 PM 3/5/2020 PD: AEC_pdf.pltcfg DS: AEC_Screen.dscript

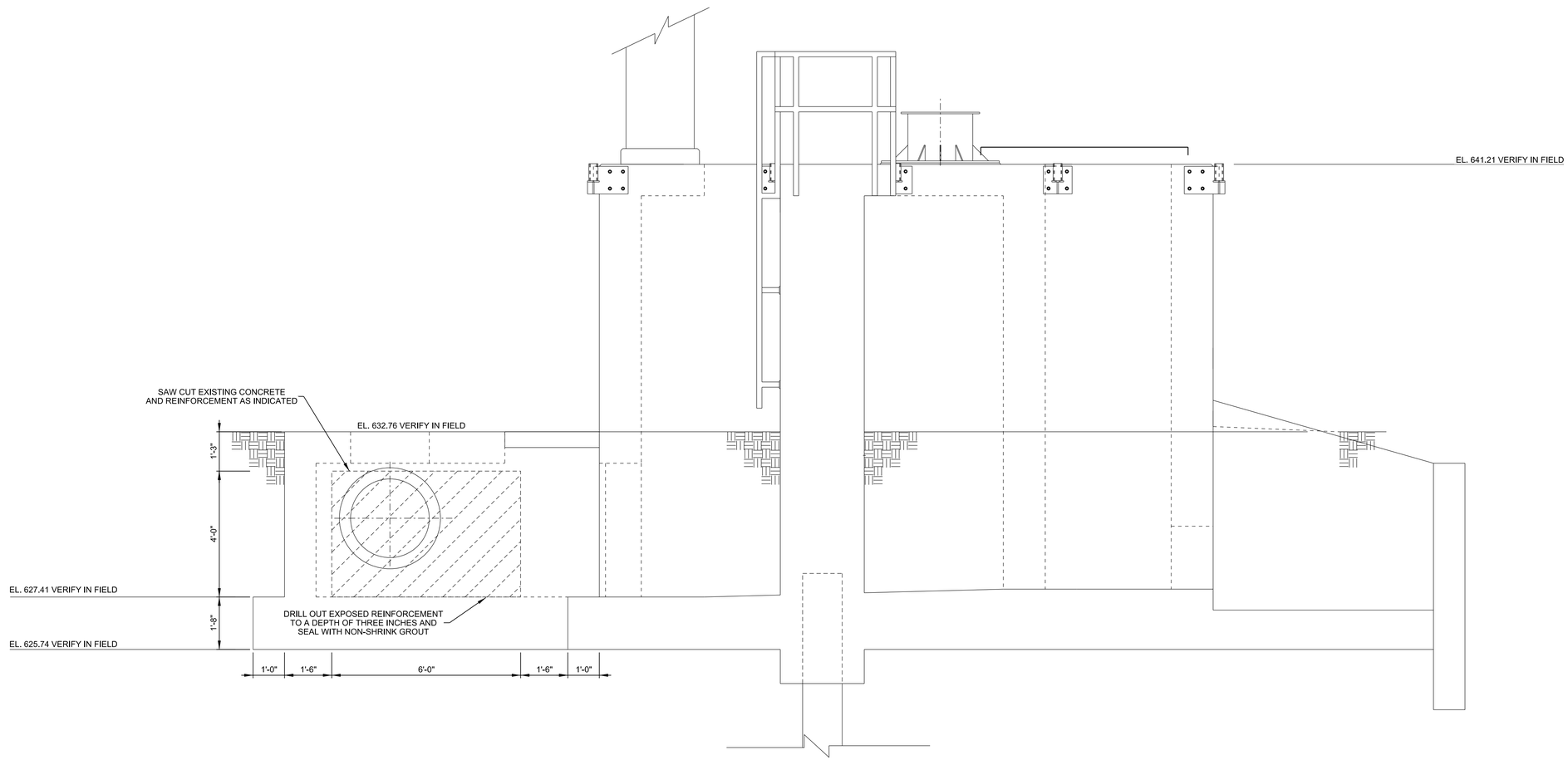

B2 PUMP STSTION #2 DEMOLITION ELEVATION

SCALE: 1/2" = 1'

0 1' 2' 4'

US Army Corps of Engineers®

MARK	DESCRIPTION	DATE

DESIGNED BY: JEREMY HARRIS
DRAWN BY: JH
CHECKED BY:
SUBMITTED BY: FAYE LEFFLER, PE
SIZE: FILE NAME: 113244_SD203.dgn

ISSUE DATE: 12/20/18
SOLICITATION NO.: W912P6-19-B-00XX
CONTRACT NO.: W912P6-19-C-00XX
PROJECT ID:
PROJECT ID

U.S. ARMY CORPS OF ENGINEERS
CHICAGO DISTRICT
231 S. LASALLE ST. SUITE 1500
CHICAGO, ILLINOIS 60604

UPPER DES PLAINES RIVER
LEVEE 37 - PUMP STATION UPGRADE
MOUNT PROSPECT, ILLINOIS

PUMP STATION #2 ADDITIONS
DEMOLITION ELEVATION

SHEET ID

SD203

...\Levee 37_Pump Station Upgrade Project-113244\40 - Geospatial Data\Drawings\CAD_BIM_Sheets\Sheet File - Structural - Struct
1:57:34 PM 3/5/2020 PD: AEC_pdf.pltcfg DS: AEC_Screen.dscript

GENERAL NOTES

1. TEMPORARY STRUCTURAL SHORING DETAILS MUST BE PROVIDED IN THE DEMOLITION PLAN FOR APPROVAL IN ACCORDANCE WITH SECTION 02 41 00, DEMOLITION.

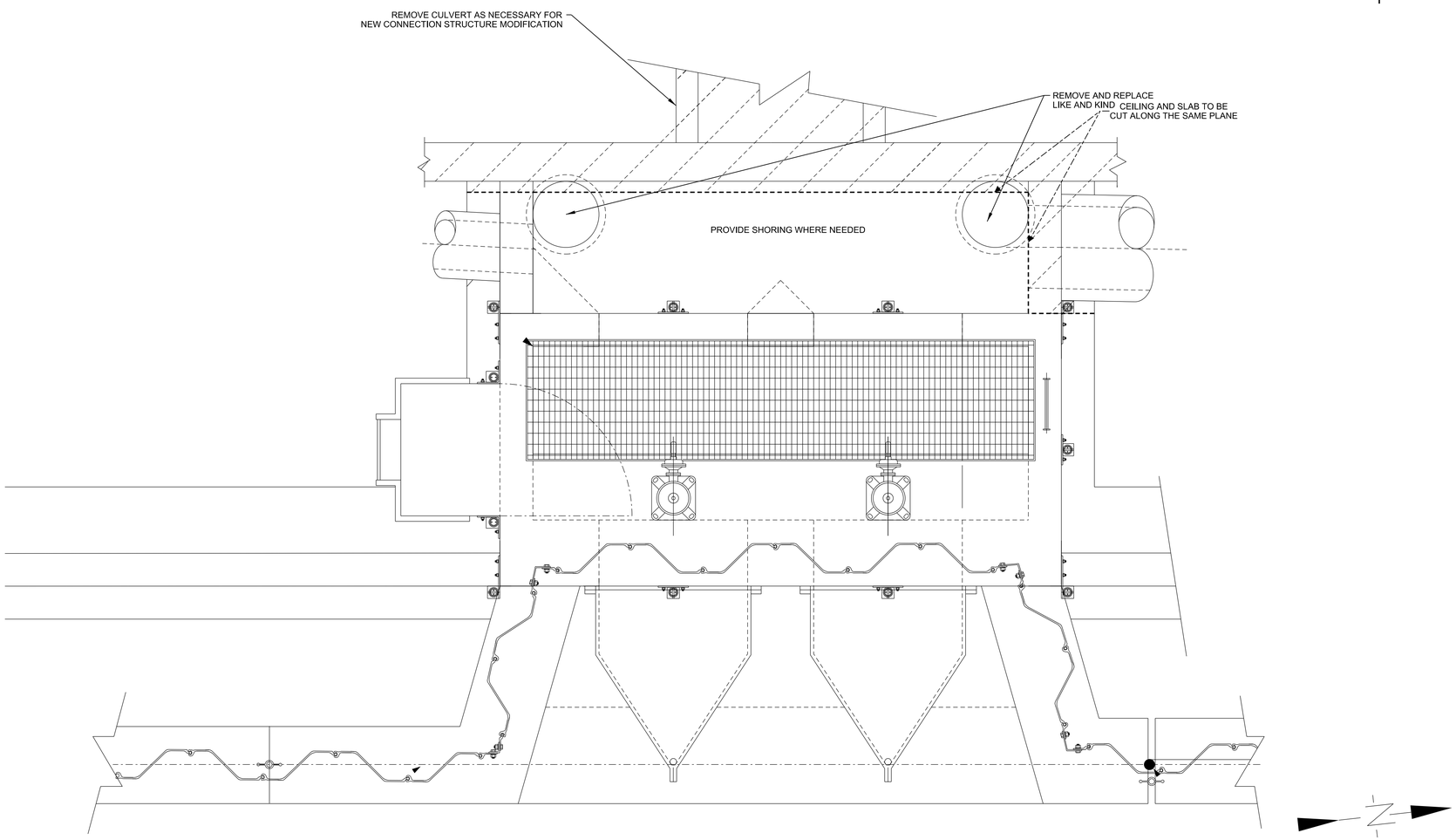

B2 BACKFLOW STRUCTURE 1 DEMOLITION

SCALE: 1/2" = 1'

0 1' 2' 4'

US Army Corps of Engineers®

MARK	DESCRIPTION	DATE

U.S. ARMY CORPS OF ENGINEERS
CHICAGO DISTRICT
231 S. LASALLE ST., SUITE 1500
CHICAGO, ILLINOIS 60604

DESIGNED BY: JEREMY HARRIS
DRAWN BY: JH
CHECKED BY: KS
SUBMITTED BY: FAYE LETTLER
SIZE: ANSI D
FILE NAME: 113244_SD501.dgn
ISSUE DATE: 12/2018
SOLICITATION NO.: W912P6-19-B-00XX
CONTRACT NO.: W912P6-19-C-00XX
PROJECT ID: PROJECT ID

UPPER DES PLAINES RIVER
LEVEE 37 - PUMP STATION UPGRADE
MOUNT PROSPECT, ILLINOIS

BACKFLOW STRUCTURE 1 DEMOLITION

SHEET ID

SD-501

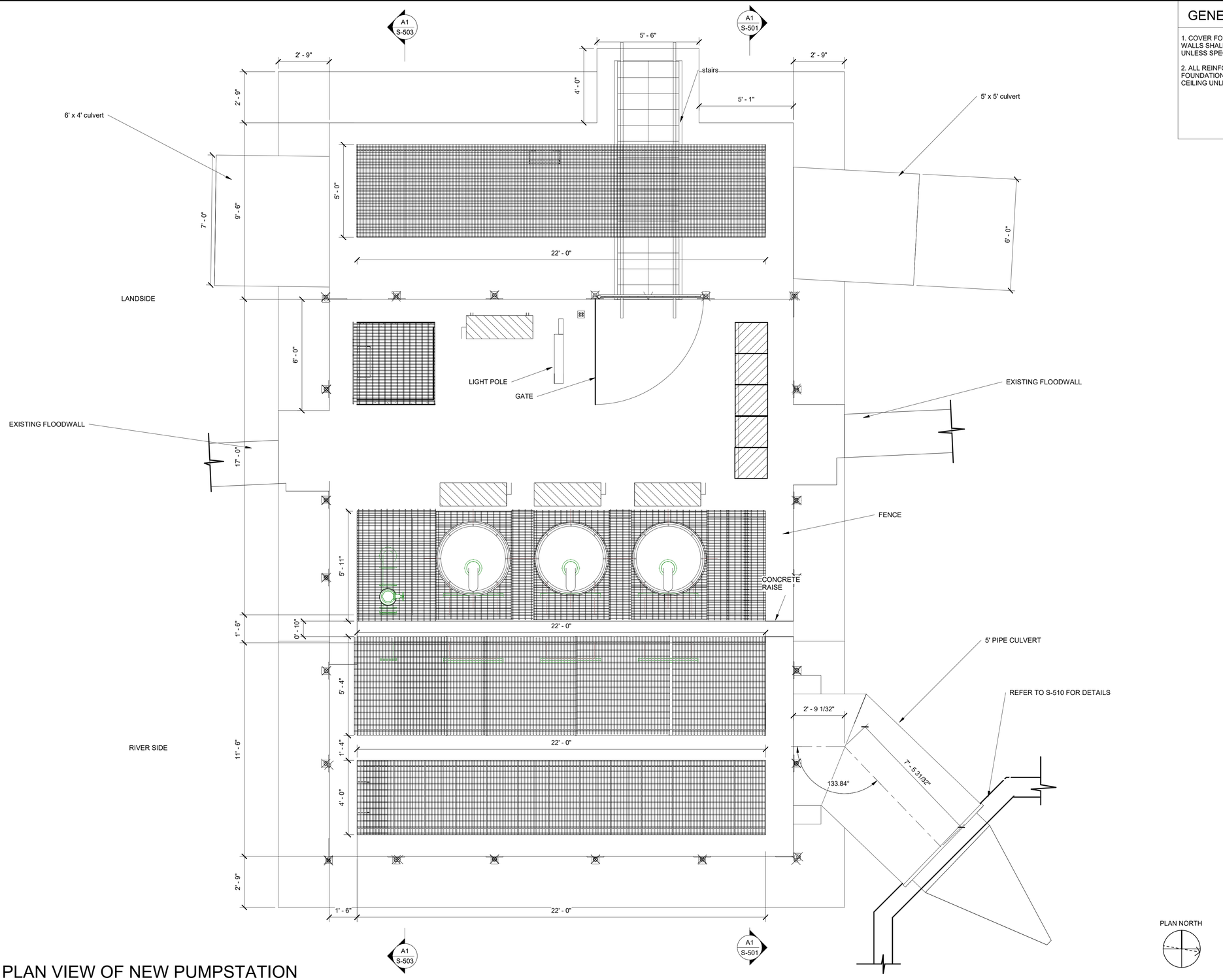

A1 PLAN VIEW OF NEW PUMPSTATION

3/8" = 1'-0"

GENERAL NOTES

1. COVER FOR FOUNDATION SHALL BE 4" COVER FOR WALLS SHALL BE 3" COVER FOR CEILING SHALL BE 3" UNLESS SPECIFIED OTHERWISE

2. ALL REINFORCEMENT SHALL BE #9 BAR FOR FOUNDATION, #7 BAR FOR WALLS, AND #8 BAR FOR CEILING UNLESS SPECIFIED OTHERWISE

US Army Corps of Engineers ®

MARK	DESCRIPTION	APPR	DATE

DESIGNED BY: Kathy Sitko
DRAWN BY: Kathy Sitko
CHECKED BY: Jeremy Harris
SUBMITTED BY: KATE LEFLER, PE
SIZE: ANSI 'D'

ISSUE DATE: MARCH 2020
SOLICITATION NO.: W912P5-20-B-0032
CONTRACT NO.:
DRAWING CODE: XXXXXXXXXXX

US ARMY CORPS OF ENGINEERS
CHICAGO DISTRICT
231 S. LASALLE ST. SUITE 1500
CHICAGO, IL 60604

UPPER DES PLAINES RIVER
LEVEE 37 - PUMP STATION UPGRADE
MOUNT PROSPECT, ILLINOIS
PLAN VIEW OF NEW PUMPSTATION

SHEET ID

S-101

G:\CADD\Levee 37_Pump Station Upgrade Project-113244\8_27_2019\LV 37 Structural 100%.rvt
3/12/2020 4:23:17 PM

FINAL DESIGN

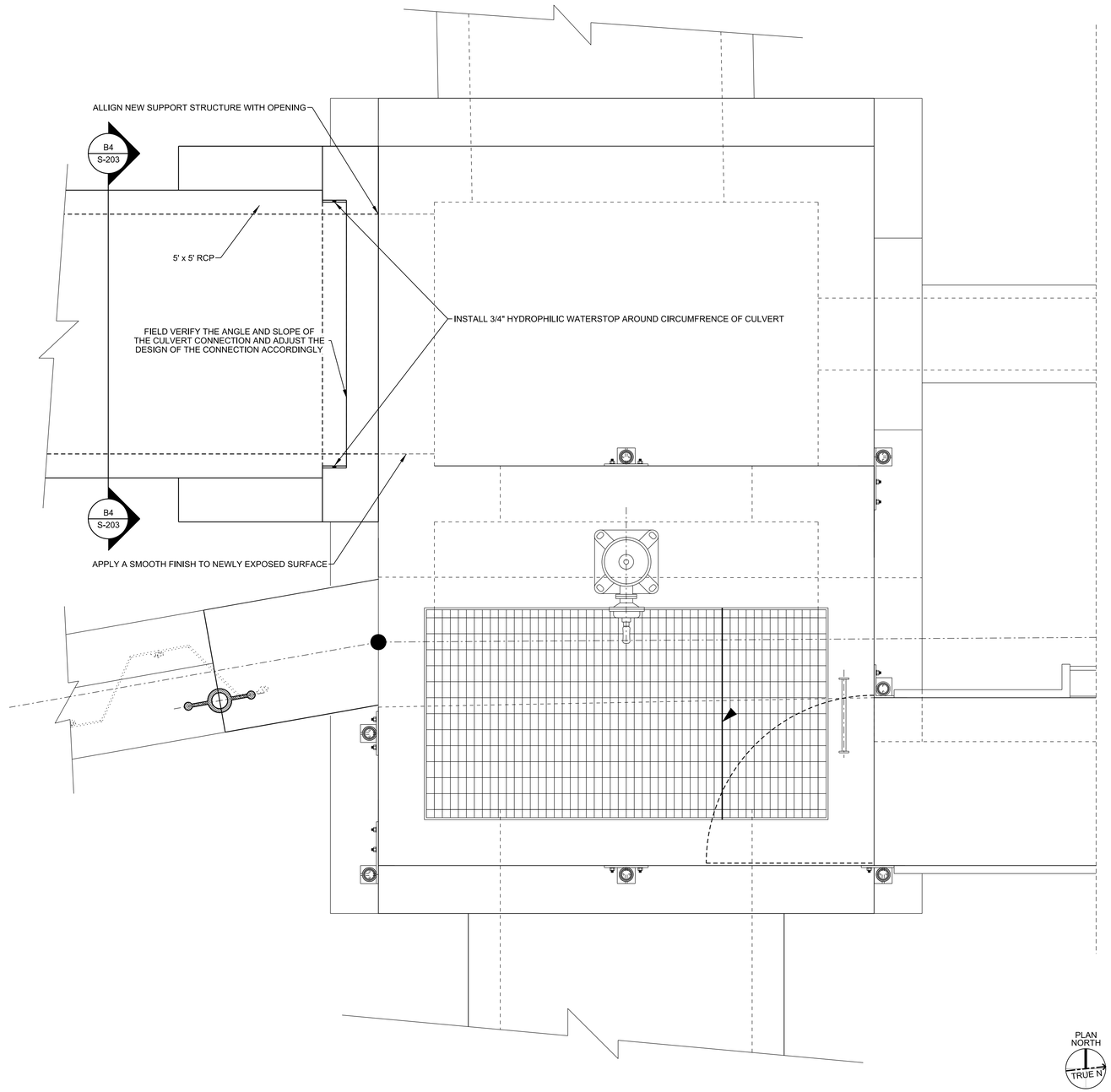

A3 CLOSURE STRUCTURE #6 PROPOSED PLAN

SCALE: 3/4" = 1'

0 1' 2' 4'

US Army Corps of Engineers®

MARK	DESCRIPTION	DATE

DESIGNED BY: JEREMY HARRIS
DRAWN BY: JH
CHECKED BY:
SUBMITTED BY:
FAYE LEFTLER
SIZE:
ISSUE DATE: 12/2018
SOLICITATION NO.: W912P6-19-B-00XX
CONTRACT NO.: W912P6-19-C-00XX
PROJECT ID:
PROJECT ID
FILE NAME: 113244_S-102.dgn

U.S. ARMY CORPS OF ENGINEERS
CHICAGO DISTRICT
231 S. LASALLE ST. SUITE 1500
CHICAGO, ILLINOIS 60604

UPPER DES PLAINES RIVER
LEVEE 37 - PUMP STATION UPGRADE
MOUNT PROSPECT, ILLINOIS

CLOSURE STRUCTURE #6 ADDITIONS
PLAN VIEW

SHEET ID

S-102

...\Levee 37_Pump Station Upgrade Project-113244\40 - Geospatial Data\Drawings\CAD_BIM_Sheets\Sheet File - Structural - Struct
9:17:40 AM 3/6/2020 PD: AEC_pdf.pltcfg DS: AEC_Screen.dscript

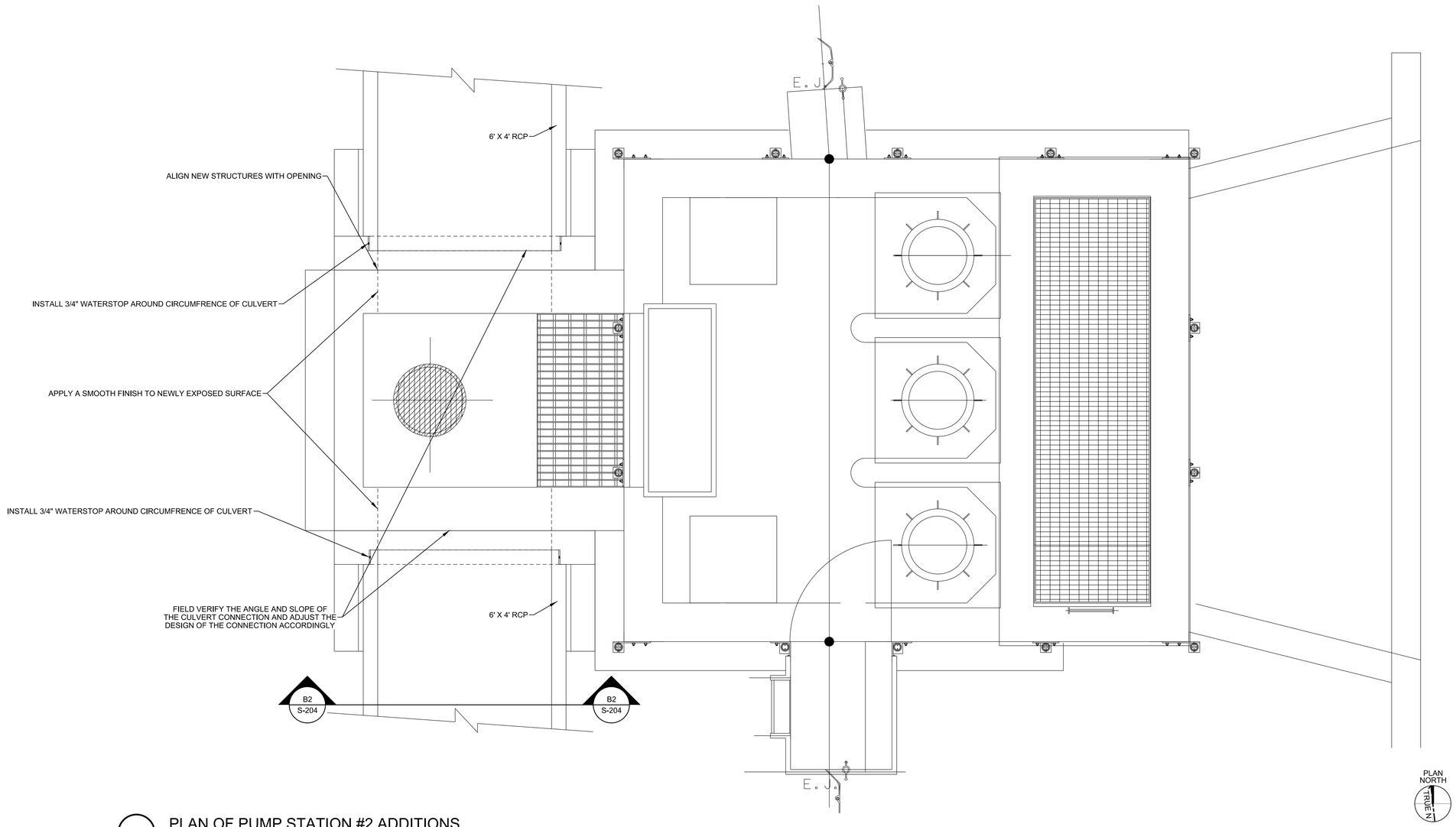

B2 PLAN OF PUMP STATION #2 ADDITIONS

SCALE: 1/2" = 1'

US Army Corps of Engineers®

MARK	DESCRIPTION	DATE

DESIGNED BY: JEREMY HARRIS	ISSUE DATE: 12/2018
DRAWN BY: JH	SOLICITATION NO.: W912P6-19-B-00XX
CHECKED BY:	CONTRACT NO.: W912P6-19-C-00XX
SUBMITTED BY: FAYE LEFTLER	PROJECT ID:
SIZE:	FILE NAME: 113244_S-103.dgn

U.S. ARMY CORPS OF ENGINEERS
CHICAGO DISTRICT
231 S. LASALLE ST., SUITE 1500
CHICAGO, ILLINOIS 60604

UPPER DES PLAINES RIVER
LEVEE 37 - PUMP STATION UPGRADE
MOUNT PROSPECT, ILLINOIS

PUMP STATION #2 ADDITIONS
PLAN VIEW

SHEET ID

S-103

...\Levee 37_Pump Station Upgrade Project-113244\40 - Geospatial Data\Drawings\CAD_BIM_Sheets\Sheet File - Structural - Struct
3:48:56 PM 3/5/2020 PD: AEC_pdf.pltcfg DS: AEC_Screen.dscript

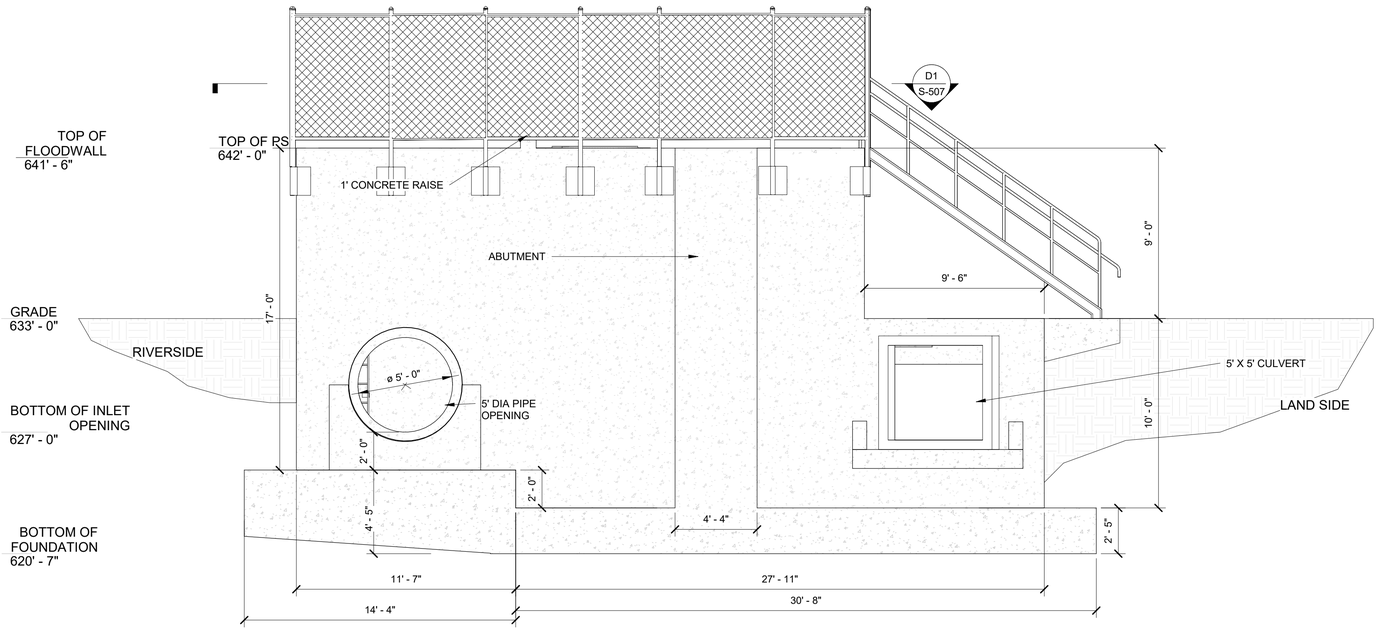

D2 ELEVATION VIEW LOOKING SOUTH

1/4" = 1'

0 2' 4' 8'

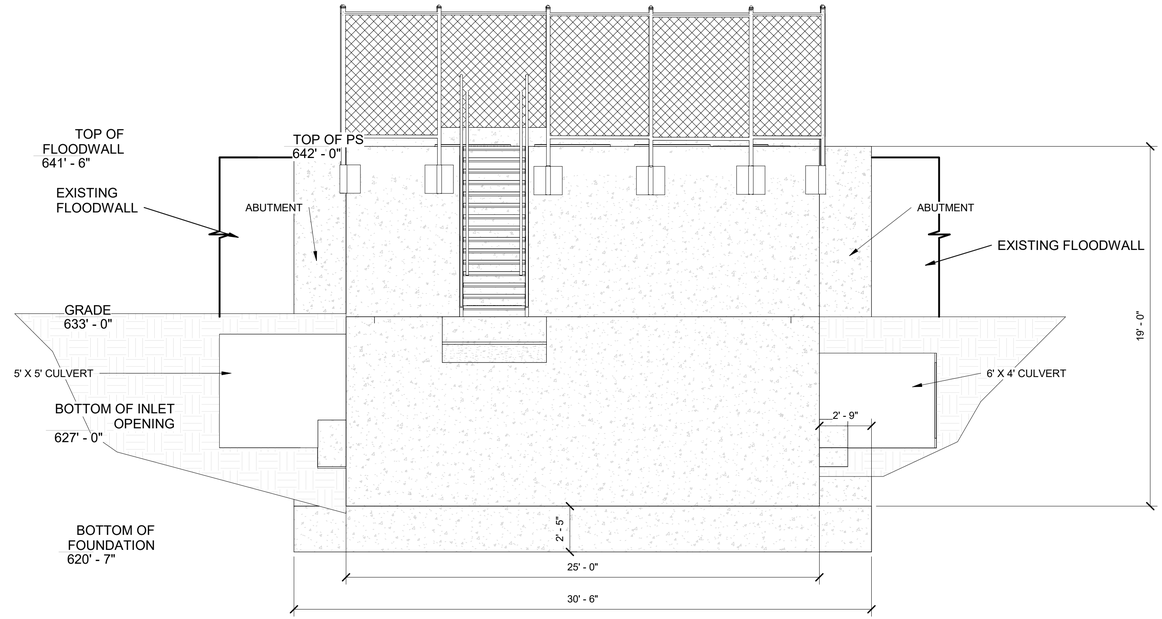

A2 ELEVATION VIEW LOOKING EAST

1/4" = 1'-0"

0 2' 4' 8'

US Army Corps of Engineers ®

MARK	DESCRIPTION	APPR.	DATE

DESIGNED BY: KATHY SITKO
DRAWN BY: KATHY SITKO
CHECKED BY: JEREMY HARRIS
SUBMITTED BY: KAYE LEFLER, PE
SIZE: ANSI D
ISSUE DATE: NOVEMBER 2019
SOLICITATION NO.: W912P5-20-B-0002
CONTRACT NO.:
DRAWING CODE: XXXXXXXXXXX

US ARMY CORPS OF ENGINEERS
CHICAGO DISTRICT
231 S. LASALLE ST. SUITE 1500
CHICAGO, IL 60604

UPPER DES PLAINES RIVER
LEVEE 37 - PUMP STATION UPGRADE
MOUNT PROSPECT, ILLINOIS

ELEVATION VIEWS

SHEET ID

S-201

G:\CADD\Levee 37_Pump Station Upgrade Project-113244\8_27_2019\LV 37 Structural 100%.rvt
1/27/2020 7:19:52 AM

FINAL DESIGN

GENERAL NOTES

1. WATERSTOP SHALL BE RUBBER OR PVC TYPE A.
2. STOP REINFORCEMENT A MIN. OF 2" FROM THE JOINT AT THE EXPANSION JOINT.
3. WATER TIGHTNESS SHALL BE ACHIEVED WITH NEW CONSTRUCTION.

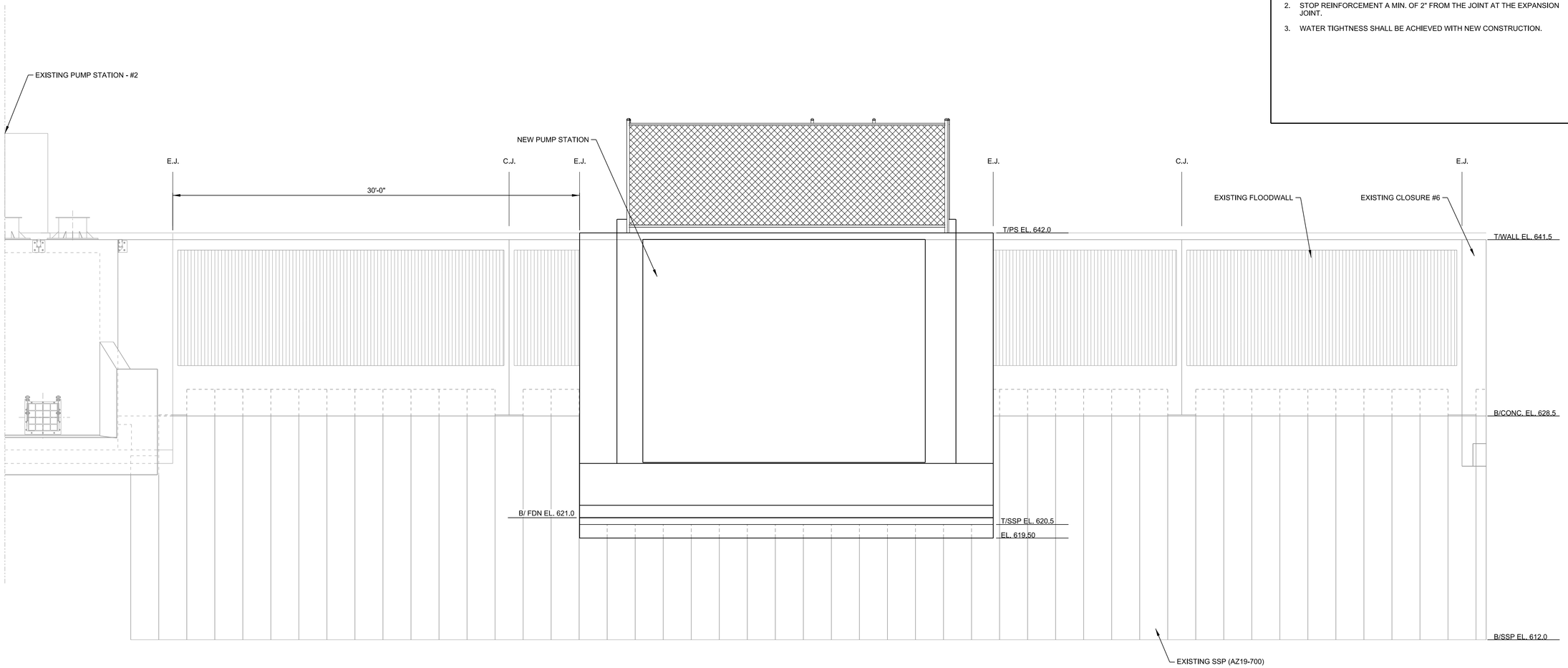

C1 PUMP STATION PROFILE

SCALE: 1/4" = 1'

0 2' 4' 8'

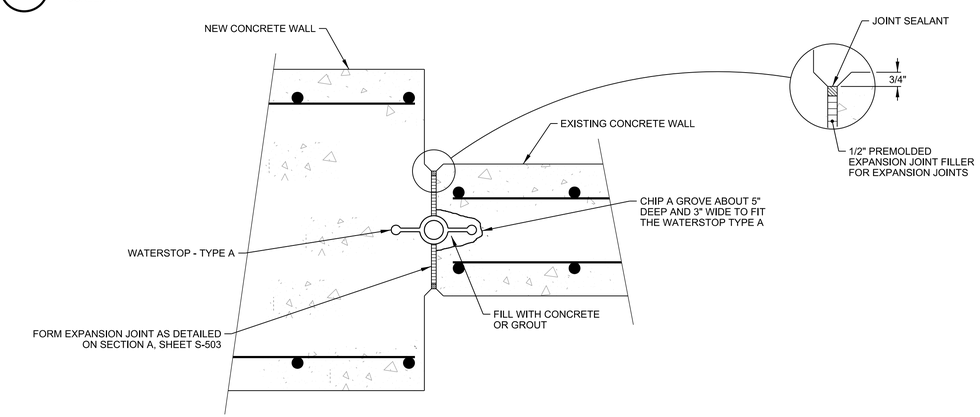

A1 DETAIL AT EXISTING WALL AND NEW WALL JOINT

SCALE: NTS

US Army Corps of Engineers®

MARK	DESCRIPTION	DATE

DESIGNED BY: KATHY SITKO
DRAWN BY: KPC
CHECKED BY: FL
SUBMITTED BY: KAYE LEFTLER
SIZE: ANSI D
FILE NAME: 113244_S-202.dgn
ISSUE DATE: 12/2018
SOLICITATION NO.: W912P6-19-B-00XX
CONTRACT NO.: W912P6-19-C-00XX
PROJECT ID: PROJECT ID

U.S. ARMY CORPS OF ENGINEERS
CHICAGO DISTRICT
231 S. LASALLE ST. SUITE 1500
CHICAGO, ILLINOIS 60604

UPPER DES PLAINES RIVER
LEVEE 37 - PUMP STATION UPGRADE
MOUNT PROSPECT, ILLINOIS

NEW FLOODWALL ELEVATION

SHEET ID

S-202

...\Levee 37_Pump Station Upgrade Project-113244\40 - Geospatial Data\Drawings\CAD_BIM_Sheets\113244_S-202.dgn
11:48:49 AM 1/28/2020 PD: AEC_pdf.pltcfg DS: AEC_Screen.dscript

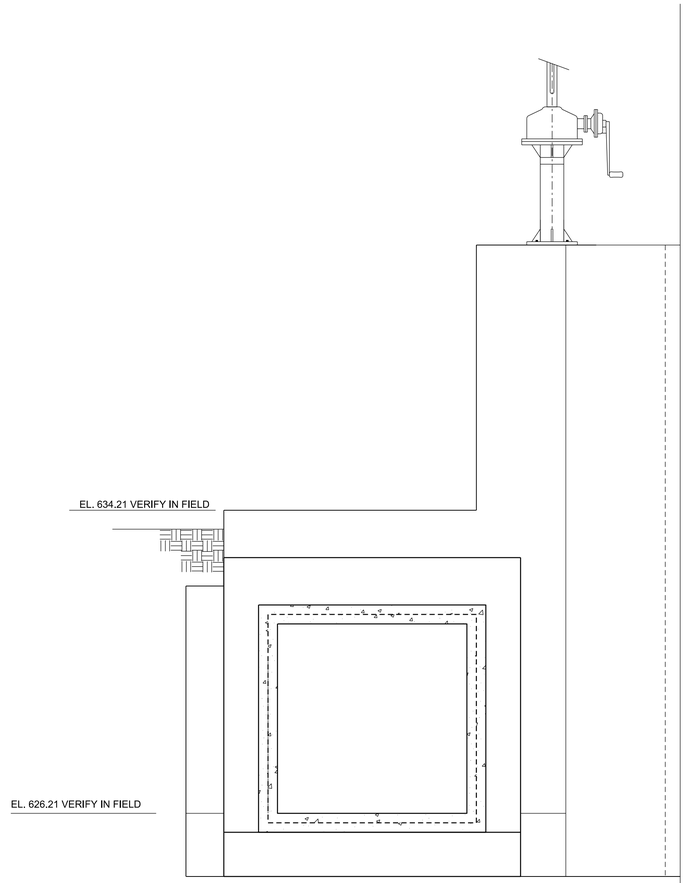

A3
S-102
B4

CLOSURE STRUCTURE #6 PROPOSED ELEVATION

SCALE: 1/2" = 1'

0 1' 2' 4'

US Army Corps of Engineers®

MARK	DESCRIPTION	DATE

ISSUE DATE: 12/20/18
SOLICITATION NO.: W912P6-19-B-00XX
CONTRACT NO.: W912P6-19-C-00XX
PROJECT ID:
PROJECT ID

DESIGNED BY: JEREMY HARRIS
DRAWN BY: JH
CHECKED BY:
SUBMITTED BY: FAYE LEFFLER, PE
SIZE:
FILE NAME: 113244_S-203.dgn

U.S. ARMY CORPS OF ENGINEERS
CHICAGO DISTRICT
231 S. LASALLE ST. SUITE 1500
CHICAGO, ILLINOIS 60604

UPPER DES PLAINES RIVER
LEVEE 37 - PUMP STATION UPGRADE
MOUNT PROSPECT, ILLINOIS

CLOSURE STRUCTURE #6 ADDITIONS
ELEVATION VIEW

SHEET ID

S-203

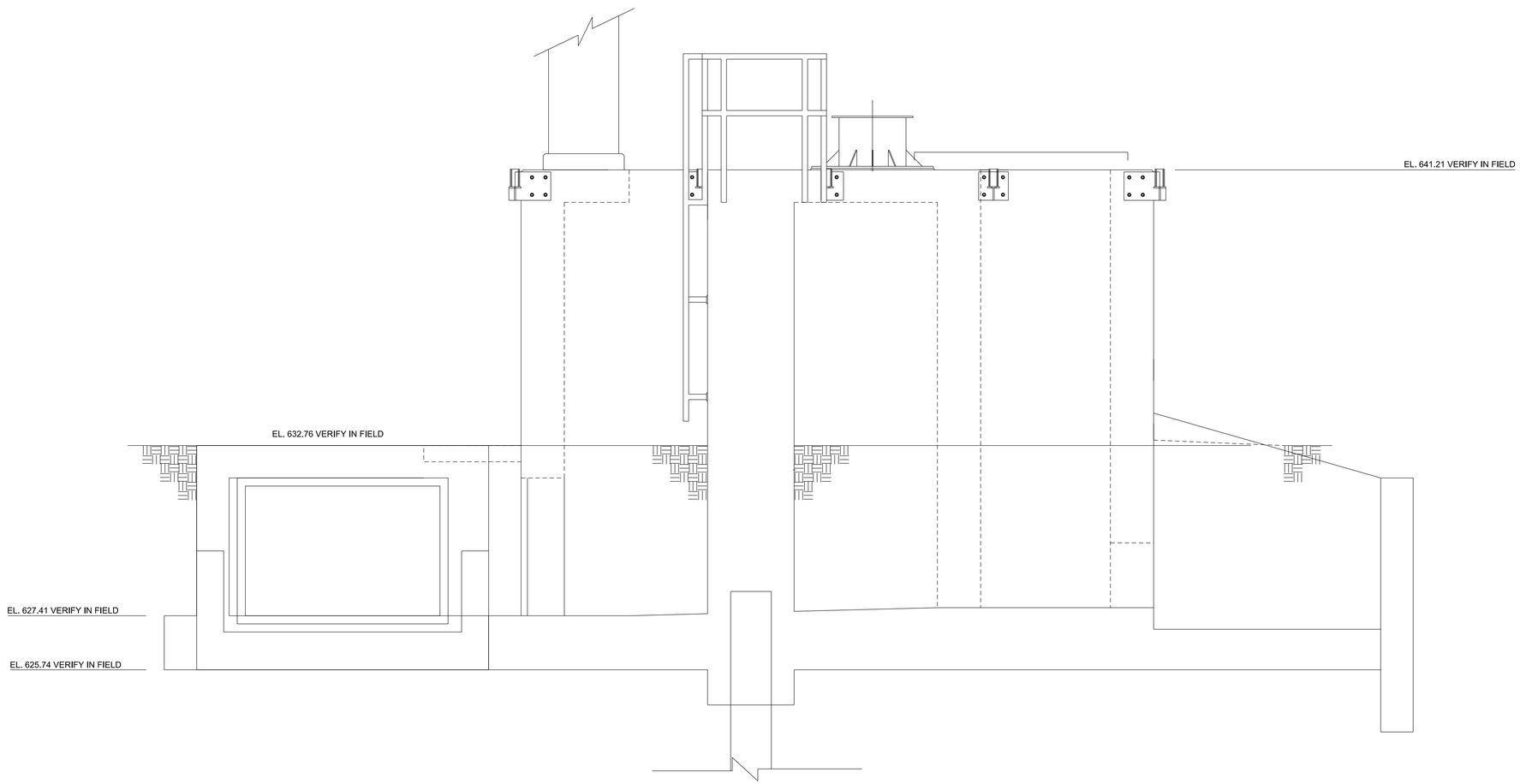

B2 / S-103 B2 PUMP STATION #2 ADDITIONS ELEVATION

SCALE: 1/2" = 1'

0 1' 2' 4'

US Army Corps of Engineers®

MARK	DESCRIPTION	DATE

DESIGNED BY: JEREMY HARRIS
DRAWN BY: JH
CHECKED BY:
SUBMITTED BY:
DATE LETTER REV:
SIZE:
ISSUE DATE: 12/20/18
SOLICITATION NO.: W912P6-19-B-00XX
CONTRACT NO.: W912P6-19-C-00XX
PROJECT ID:
PROJECT ID
FILE NAME: 113244_S-204.dgn

U.S. ARMY CORPS OF ENGINEERS
CHICAGO DISTRICT
231 S. LASALLE ST., SUITE 1500
CHICAGO, ILLINOIS 60604

UPPER DES PLAINES RIVER
LEVEE 37 - PUMP STATION UPGRADE
MOUNT PROSPECT, ILLINOIS

PUMP STSTION #2 ADDITIONS
ELEVATION VIEW

SHEET ID

S-204

NOTES:
1. #6 BAR TO GO THROUGH EVERY OTHER FLANGE OF EXISTING SHEET PILE

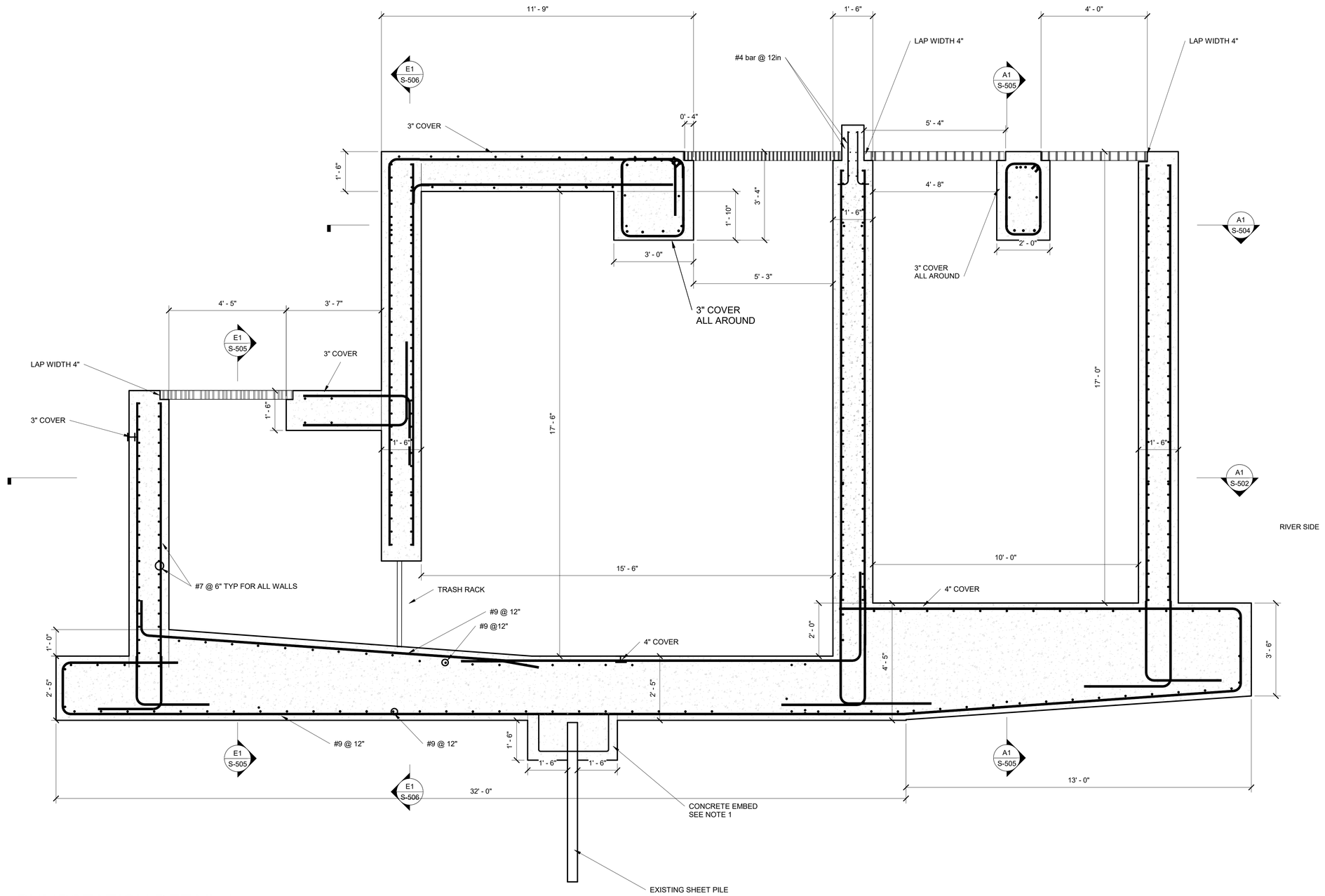

G6
S-101

A1 PUMPSTATION DETAIL 1
1/2" = 1'-0"

0 1' 2' 4'

US Army Corps of Engineers ®

MARK	DESCRIPTION	APPR.	DATE

DESIGNED BY: KATHY SITKO
DRAWN BY: KATHY SITKO
CHECKED BY: JEREMY HARRIS
SUBMITTED BY: KYLE LEFLER, PE
SIZE: ANSI D
ISSUE DATE: NOVEMBER 2019
SOLICITATION NO.: W912P5-20-B-0002
CONTRACT NO.:
DRAWING CODE: XXXXXXXXXXX

US ARMY CORPS OF ENGINEERS
CHICAGO DISTRICT
231 S. LASALLE ST., SUITE 1500
CHICAGO, IL 60604

UPPER DES PLAINES RIVER
LEVEE 37 - PUMP STATION UPGRADE
MOUNT PROSPECT, ILLINOIS
PUMPSTATION DETAIL 1

SHEET ID
S-501

G:\CADD\Levee 37_Pump Station Upgrade Project-113244\8_27_2019\LV 37 Structural 100%.rvt
1/27/2020 7:22:46 AM

FINAL DESIGN

NOTES:
1. ALL REBAR DETAIL ON OUTSIDE WALLS OF STRUCTURE ARE TO BE #9 BAR @ 12". ALL REBAR DETAIL ON INSIDE WALLS OF STRUCTURE ARE TO BE #9 BAR @ 12"

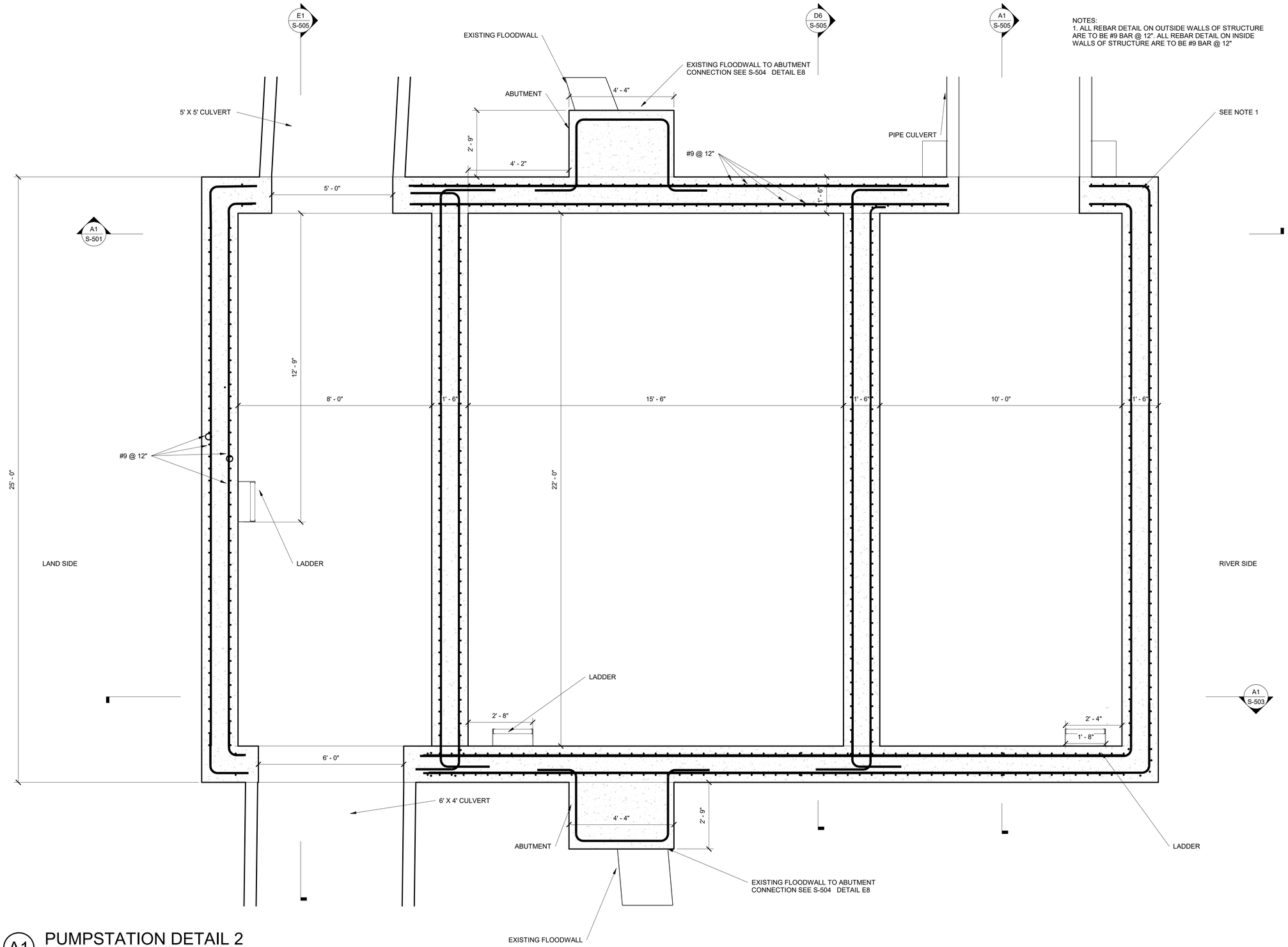

D10
S-501 A1 PUMPSTATION DETAIL 2
1/2" = 1'-0"

0 1' 2' 4'

US Army Corps of Engineers ®

MARK	DESCRIPTION	APPR.	DATE

US ARMY CORPS OF ENGINEERS
CHICAGO DISTRICT
231 S. LASALLE ST., SUITE 1500
CHICAGO, IL 60604

DESIGNED BY: KATHY SITKO	ISSUE DATE: NOVEMBER 2019
DRAWN BY: KATHY SITKO	SOLICITATION NO.: W912P5-20-B-0002
CHECKED BY: JEREMY HARRIS	CONTRACT NO.:
SUBMITTED BY: DAVID LEFLER, PE	DRAWING CODE: XXXXXXXXXXXX
SIZE: ANSI 'D'	

UPPER DES PLAINES RIVER
LEVEE 37 - PUMP STATION UPGRADE
MOUNT PROSPECT, ILLINOIS
PUMPSTATION DETAIL 2

SHEET ID
S-502

G:\CADD\Levee 37_Pump Station Upgrade Project-113244\8_27_2019\LV 37 Structural 100%.rvt
1/27/2020 7:24:34 AM

FINAL DESIGN

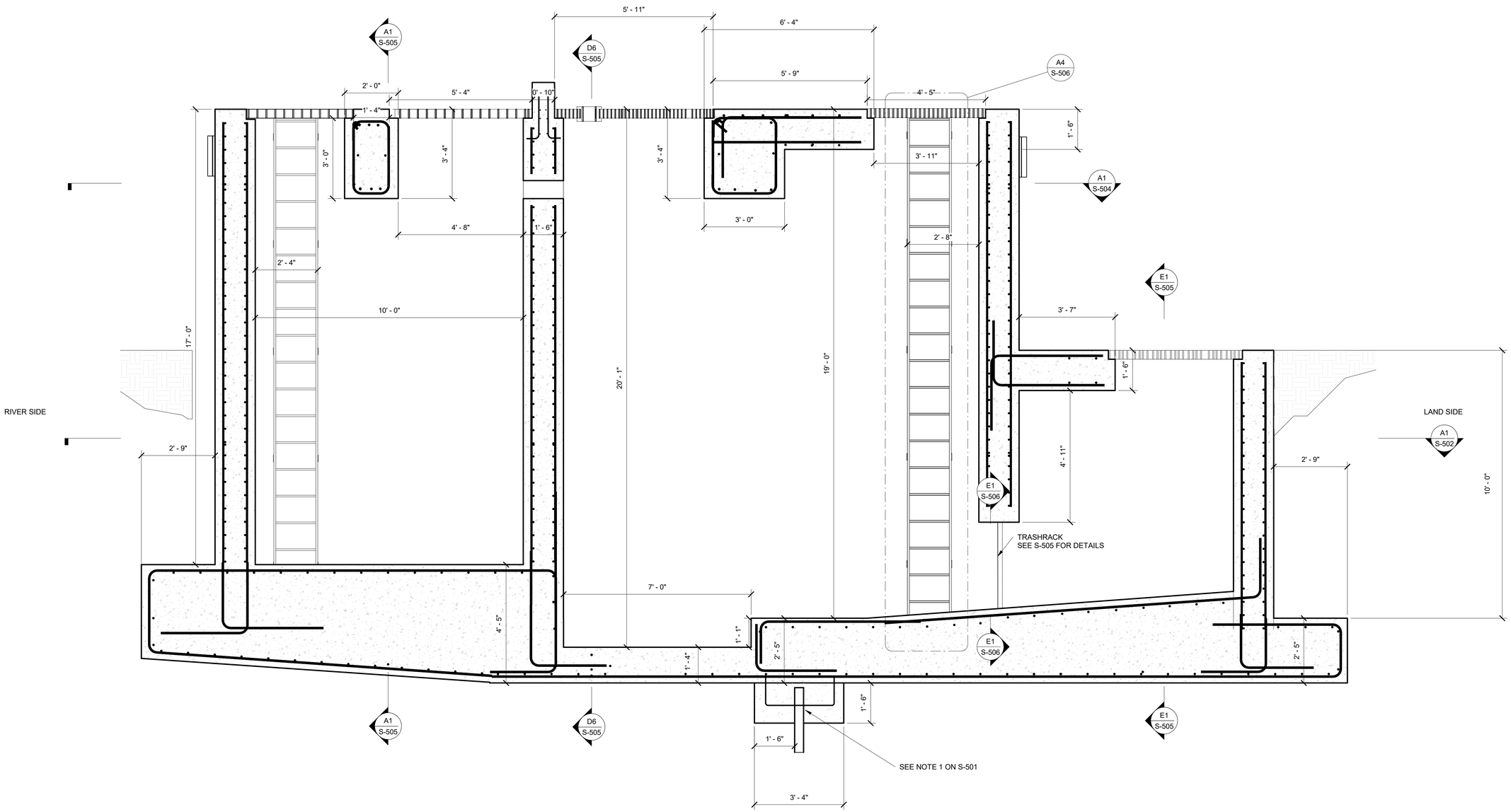

G4
S-101

A1 PUMPSTATION DETAIL 3

1/2" = 1'-0"

US Army Corps of Engineers ®

MARK	DESCRIPTION	APPR.	DATE

DESIGNED BY: Designer
DRAWN BY: Author
CHECKED BY: Checker
SUBMITTED BY: SAE LEFLER, PE
SIZE: ANSI D

ISSUE DATE: NOVEMBER 2019
SOLICITATION NO.: W912P520B002
CONTRACT NO.:
DRAWING CODE: XXXXXXXXXXX

US ARMY CORPS OF ENGINEERS
CHICAGO DISTRICT
231 S. LASALLE ST. SUITE 1500
CHICAGO, IL 60604

UPPER DES PLAINES RIVER
LEVEE 37 - PUMP STATION UPGRADE
MOUNT PROSPECT, ILLINOIS
PUMPSTATION DETAIL 3

SHEET ID
S-503

G:\CADD\Levee 37_Pump Station Upgrade Project-113244\8_27_2019\LV 37 Structural 100%.rvt
1/27/2020 7:56:27 AM

FINAL DESIGN

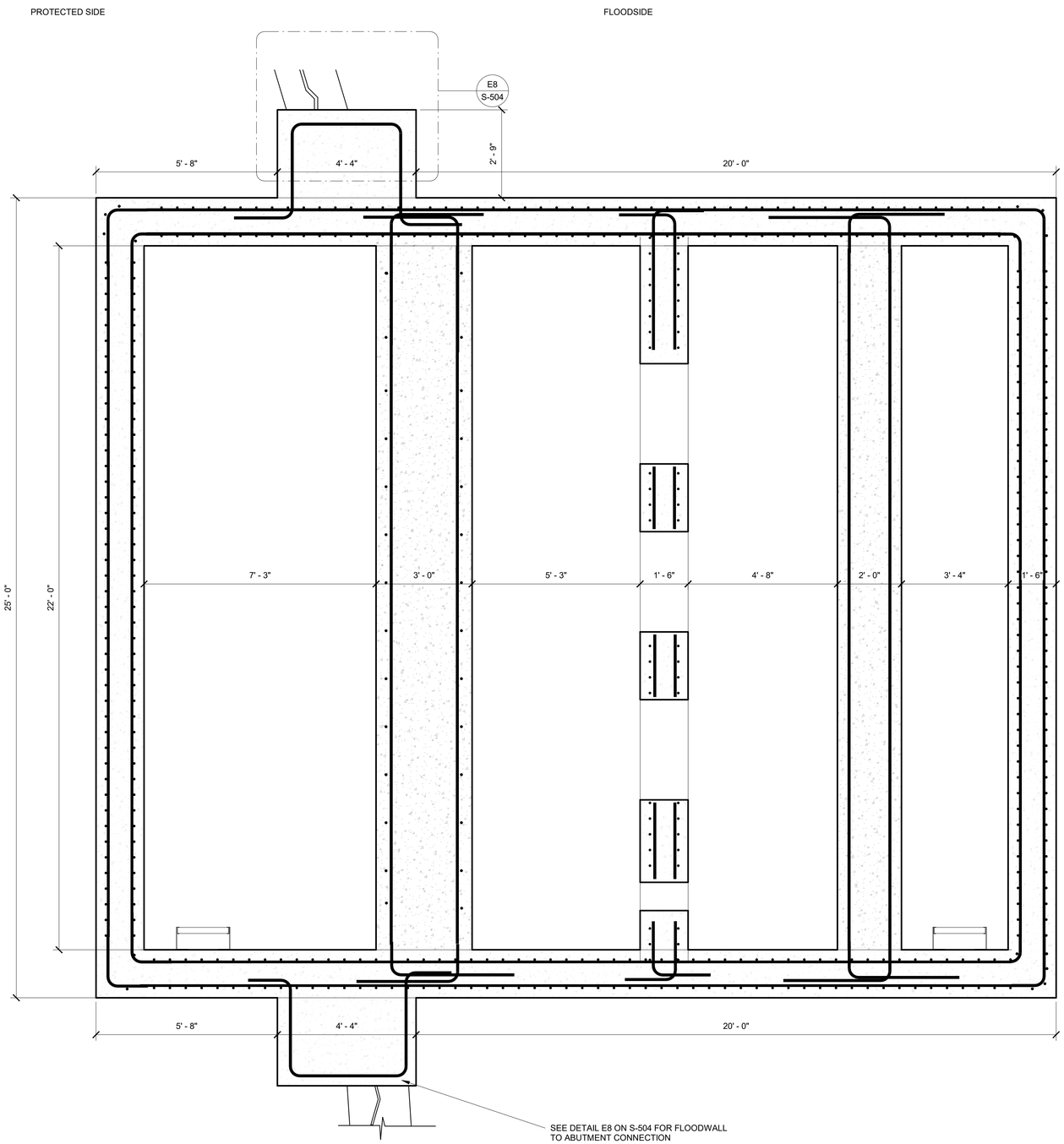

E9
S-501

A1 PUMPSTATION DETAIL 4

1/2" = 1'-0"

0 1' 2' 4'

NOTES:
CONTRACTOR IS RESPONSIBLE TO FEILD VERIFY CONNECTION OF THE FLOODWALL TO THE ABUTMENT TO ENSURE CONNECTION IS PROPER

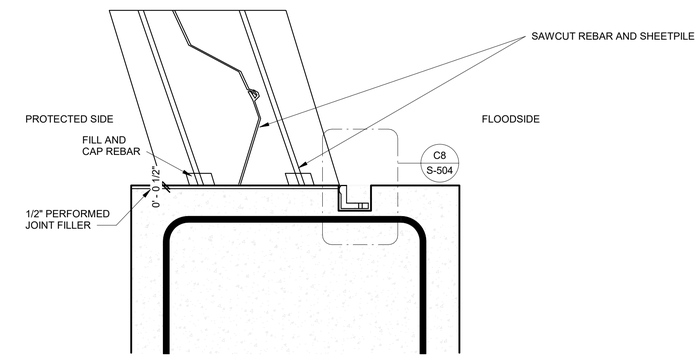

E8 TYP. WALL JOINT DETAIL

1" = 1'-0"

0 0.5' 1' 2'

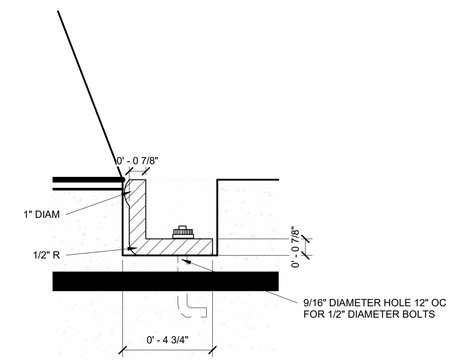

C8 TYP " L " TYPE WATERSTOP DETAIL

3" = 1'-0"

0 0.125' 0.25' 0.5' 0.75'

US Army Corps of Engineers ®

MARK	DESCRIPTION	APPR	DATE

ISSUE DATE: NOVEMBER 2019
SOLICITATION NO.: W912P5-20-B-0032
CONTRACT NO.:
DRAWING CODE: XXXXXXXXXXX

DESIGNED BY: Designer
DRAWN BY: Author
CHECKED BY: Checker
SUBMITTED BY: CLAYTE LEFFLER, PE
SIZE: ANSI D
FSCM NO.:

US ARMY CORPS OF ENGINEERS
CHICAGO DISTRICT
231 S. LASALLE ST. SUITE 1500
CHICAGO, IL 60604

UPPER DES PLAINES RIVER
LEVEE 37 - PUMP STATION UPGRADE
MOUNT PROSPECT, ILLINOIS
PUMPSTATION DETAIL 4

SHEET ID
S-504

G:\CADD\Levee 37_Pump Station Upgrade Project-113244\8_27_2019\LV 37 Structural 100%.rvt
1/27/2020 7:58:30 AM

FINAL DESIGN

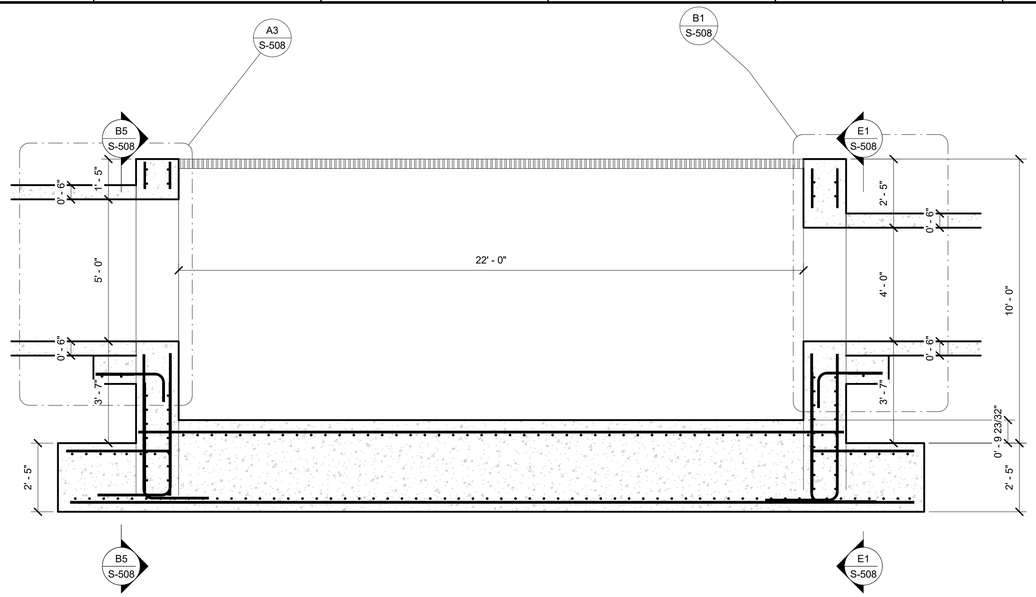

B3 / S-503 (E1) DETAIL 5
3/8" = 1'-0"

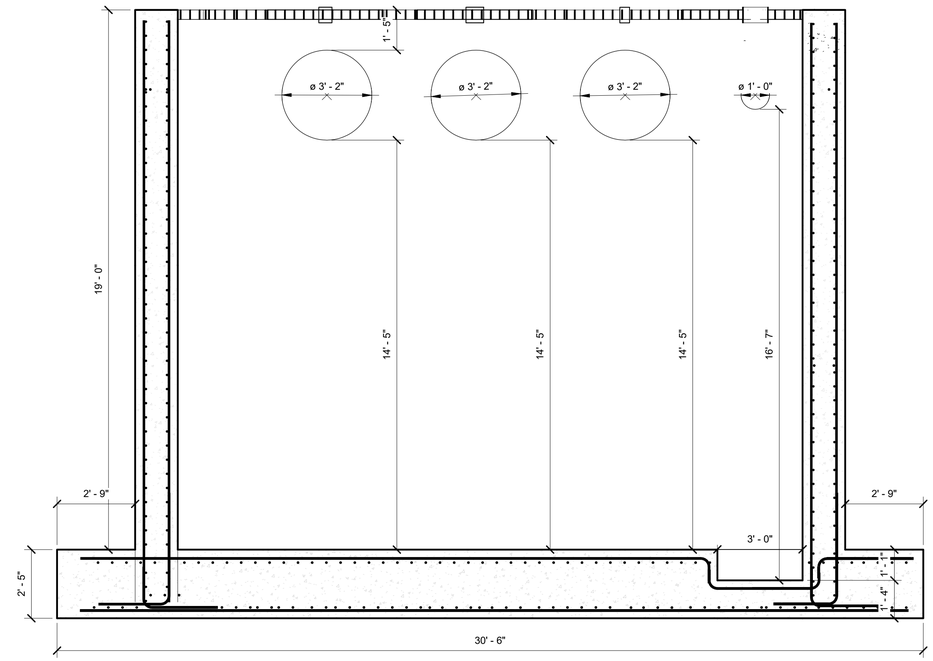

B3 / S-503 (D6) MIDDLE WALL DETAIL
3/8" = 1'-0"

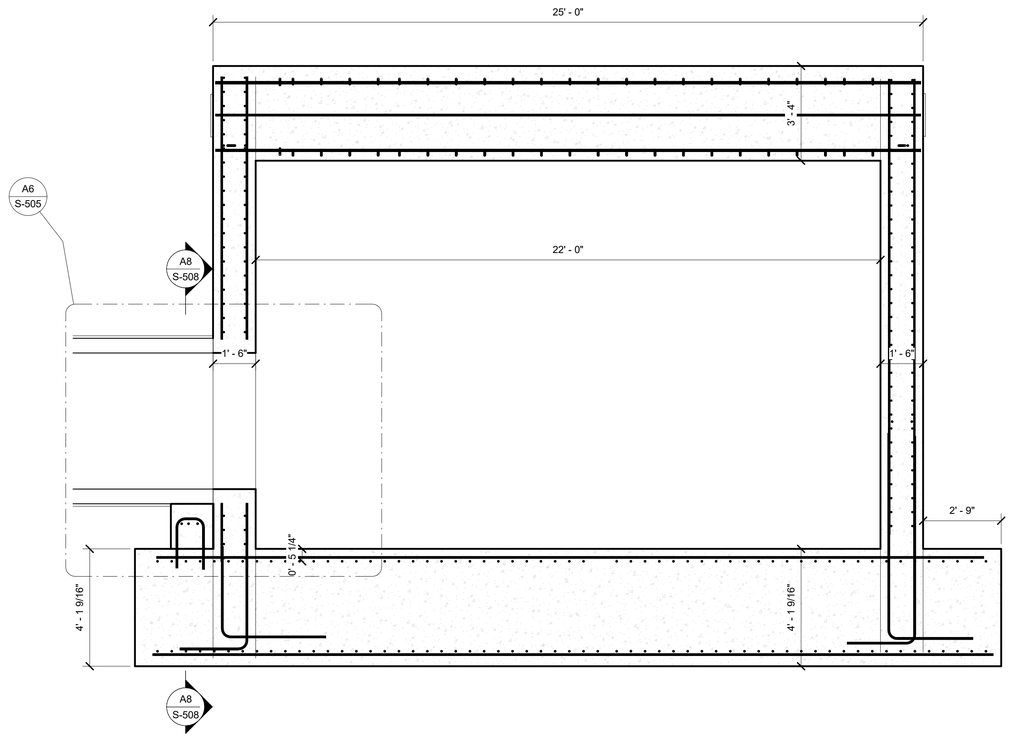

B4 / S-503 (A1) DETAIL 6
3/8" = 1'-0"

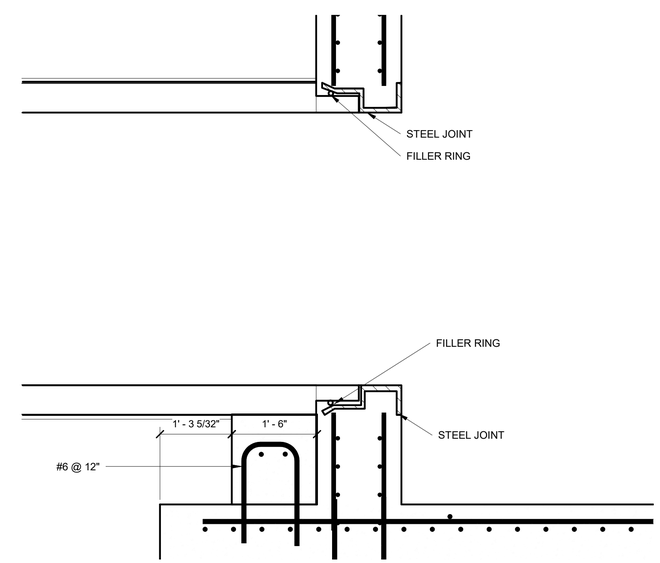

(A6) PIPE CULVERT CONNECTION DETAIL

US Army Corps of Engineers ®

MARK	DESCRIPTION	APPR	DATE

DESIGNED BY:
Designer:
DRAWN BY:
Author:
CHECKED BY:
Checker:
SUBMITTED BY:
RAYE L. LEFFLER, PE
SIZE: ANSI 'D'

ISSUE DATE: NOVEMBER 2019
SOLICITATION NO.: W912P5-20-B-0002
CONTRACT NO.:
DRAWING CODE: XXXXXXXXXXX

US ARMY CORPS OF ENGINEERS
CHICAGO DISTRICT
231 S. LASALLE ST, SUITE 1500
CHICAGO, IL 60604

UPPER DES PLAINES RIVER
LEVEE 37 - PUMP STATION UPGRADE
MOUNT PROSPECT, ILLINOIS
PUMPSTATION DETAIL 5

SHEET ID
S-505

G:\CADD\Levee 37_Pump Station Upgrade Project-113244\8_27_2019\LV 37 Structural 100%.rvt
1/27/2020 8:36:04 AM

FINAL DESIGN

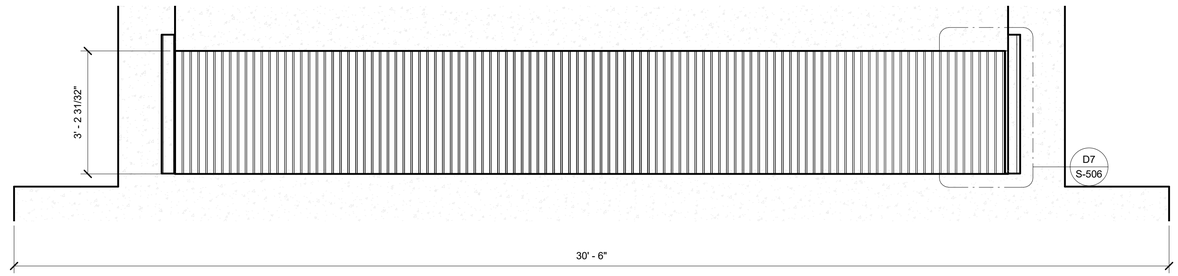

B7 E1 TRASHRACK ELEVATION
S503
1/2" = 1'-0"
0 1' 2' 4'

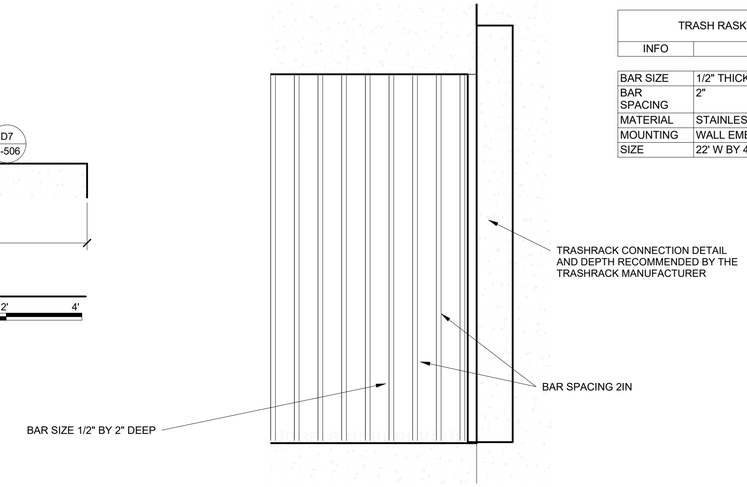

TRASH RASK SCREEN	
INFO	TYPE
BAR SIZE	1/2" THICK X 2" DEEP
BAR SPACING	2"
MATERIAL	STAINLESS STEEL
MOUNTING	WALL EMBEDDED
SIZE	22' W BY 4' H

D7 TRASHRACK BAR DETAIL
1 1/2" = 1'-0"
0 0.25' 0.5' 1' 1.5'

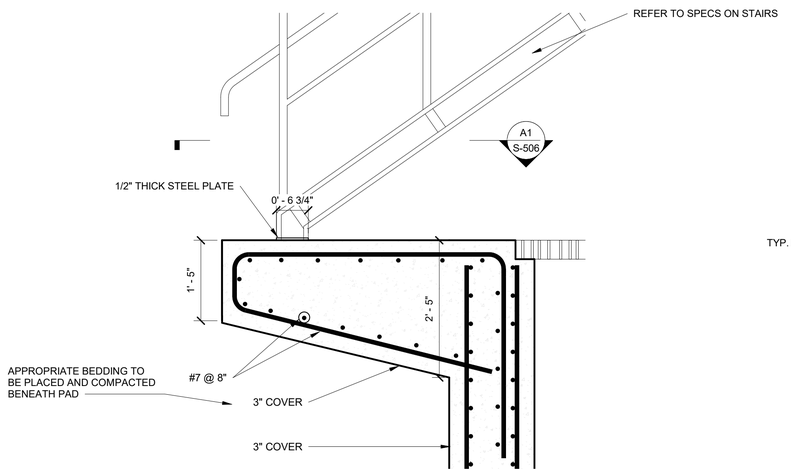

G6 C1 ELEVATION VIEW-STAIR PAD
S101
0 0.5' 1' 2' 3'

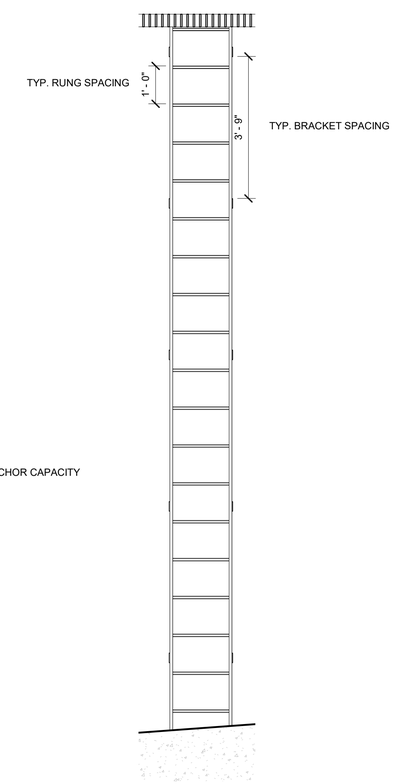

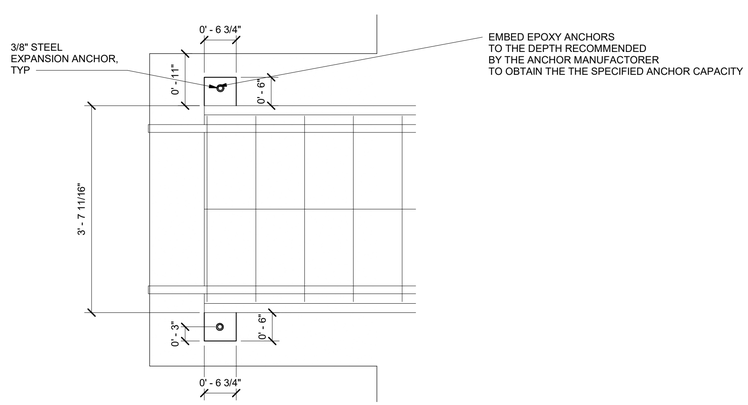

A1 Section 10
0 0.5' 1' 2' 3'

A4 LADDER DETAIL
1/2" = 1'-0"
0 1' 2' 4'

US Army Corps of Engineers ®

MARK	DESCRIPTION	APPR	DATE

DESIGNED BY: KATHY SITKO	ISSUE DATE: NOVEMBER 2019
DRAWN BY: KATHY SITKO	SOLICITATION NO.: W912P5-20-B-0002
CHECKED BY: JEREMY HARRIS	CONTRACT NO.:
SUBMITTED BY: KAYE LEFFLER, P.E	DRAWING CODE: XXXXXXXXXXX
SIZE: ANSI 'D'	

US ARMY CORPS OF ENGINEERS
CHICAGO DISTRICT
231 S. LASALLE ST. SUITE 1500
CHICAGO, IL 60604

UPPER DES PLAINES RIVER
LEVEE 37 - PUMP STATION UPGRADE
MOUNT PROSPECT, ILLINOIS
MISCELLANEOUS DETAILS

SHEET ID
S-506

G:\CADD\Levee 37_Pump Station Upgrade Project-113244\8_27_2019\LV 37 Structural 100%.rvt
1/27/2020 10:24:55 AM

FINAL DESIGN

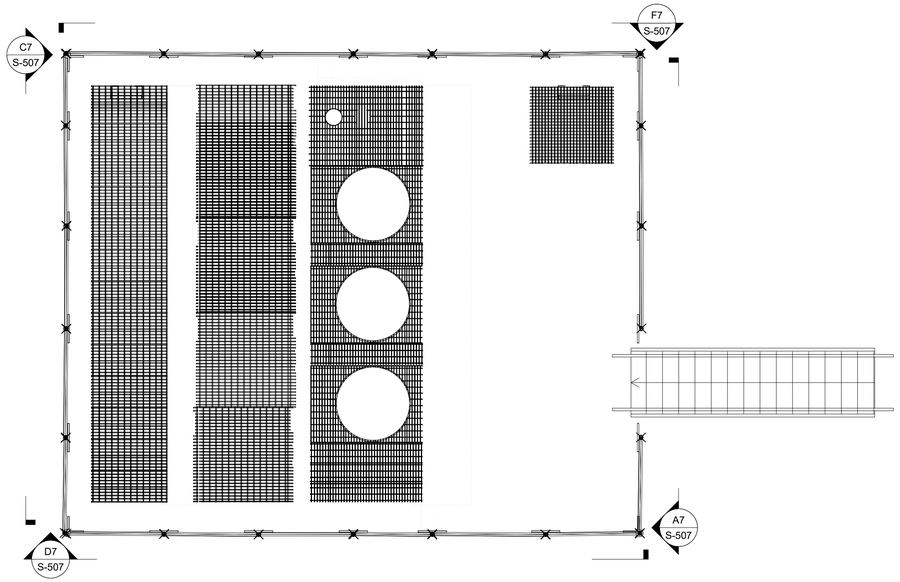

D1 FENCE DETAIL
1/4" = 1'-0"
0 2' 4' 8'

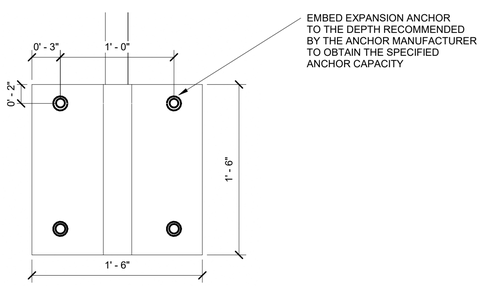

B1 FACE FENCE BRACKET- DETAIL
1 1/2" = 1'-0"
0 0.25' 0.5' 1' 1.5'

NOTES:
CONTRACTOR REFER TO SPECS FOR FENCE INFORMATION

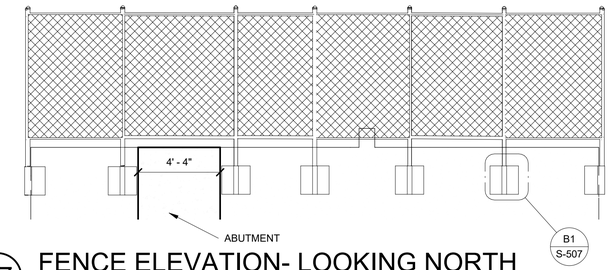

F7 FENCE ELEVATION- LOOKING NORTH
1/4" = 1'-0"
0 2' 4' 8'

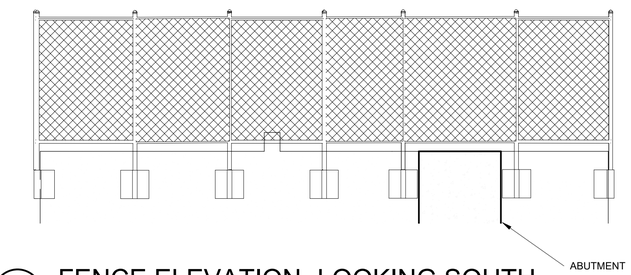

D7 FENCE ELEVATION- LOOKING SOUTH
1/4" = 1'-0"
0 2' 4' 8'

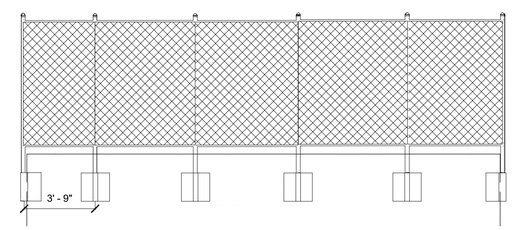

C7 FENCE ELEVATION- LOOKING WEST
1/4" = 1'-0"
0 2' 4' 8'

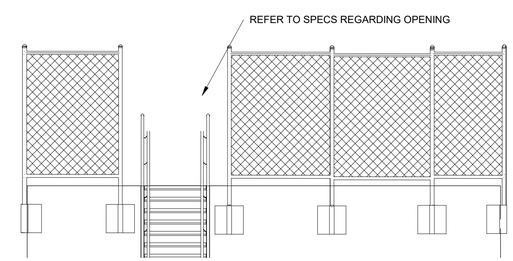

A7 FENCE ELEVATION - LOOKING EAST
1/4" = 1'-0"
0 2' 4' 8'

US Army Corps of Engineers ®

MARK	DESCRIPTION	APPR.	DATE

DESIGNED BY: Designer
DRAWN BY: Author
CHECKED BY: Checker
SUBMITTED BY: KAYE LEFFLER, PE
SIZE: ANSI 'D'
ISSUE DATE: NOVEMBER 2019
SOLICITATION NO.: W912P5-20-B-0002
CONTRACT NO.:
DRAWING CODE: XXXXXXXXXXX
DRAWING NO.:

US ARMY CORPS OF ENGINEERS
CHICAGO DISTRICT
231 S. LASALLE ST., SUITE 1500
CHICAGO, IL 60604

UPPER DES PLAINES RIVER
LEVEE 37 - PUMP STATION UPGRADE
MOUNT PROSPECT, ILLINOIS
MISCELLANEOUS DETAILS

SHEET ID
S-507

G:\CADD\Levee 37_Pump Station Upgrade Project-113244\8_27_2019\LV 37 Structural 100%.rvt
1/27/2020 9:32:21 AM

FINAL DESIGN

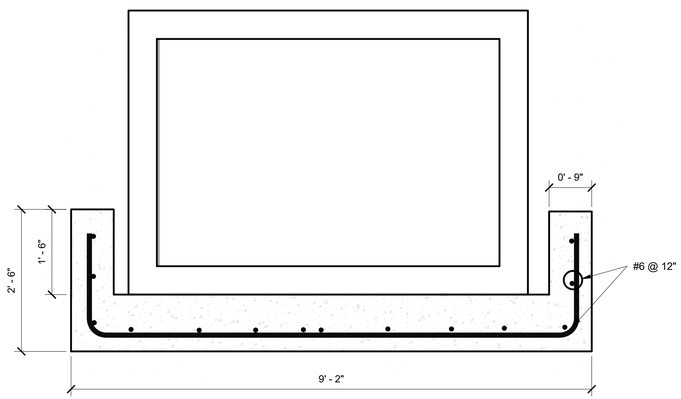

E1 6' X 4' CULVERT CRADLE DETAIL

0 0.5' 1' 2' 3'

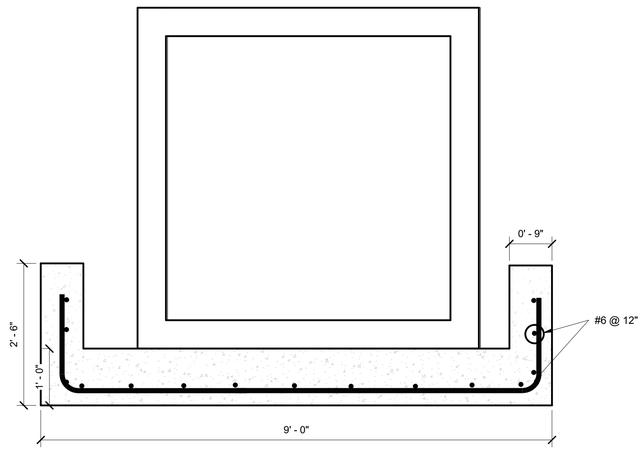

E4 5' X 5' CULVERT CRADLE DETAIL

0 0.5' 1' 2' 3'

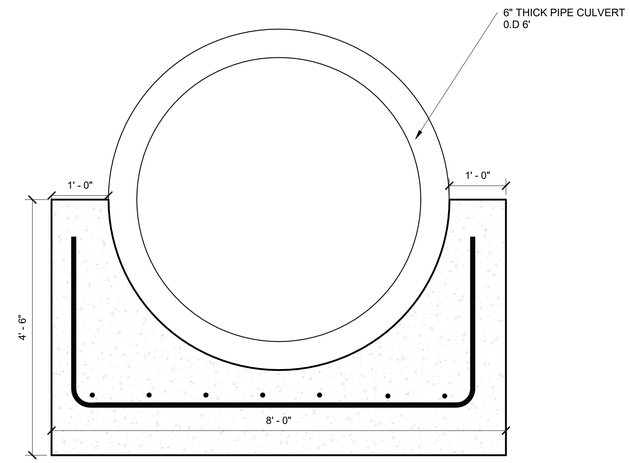

E7 DISCHARGE PIPE CRADLE DETAIL

0 0.5' 1' 2' 3'

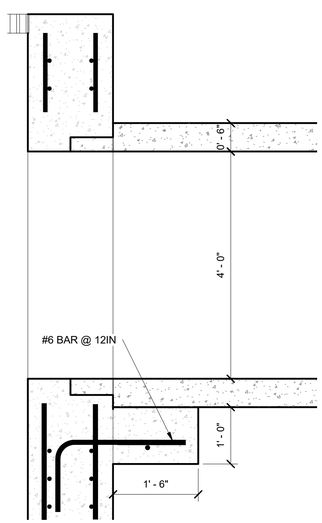

B1 6 X 4 CULVERT CONNECTION DETAIL

0 0.5' 1' 2' 3'

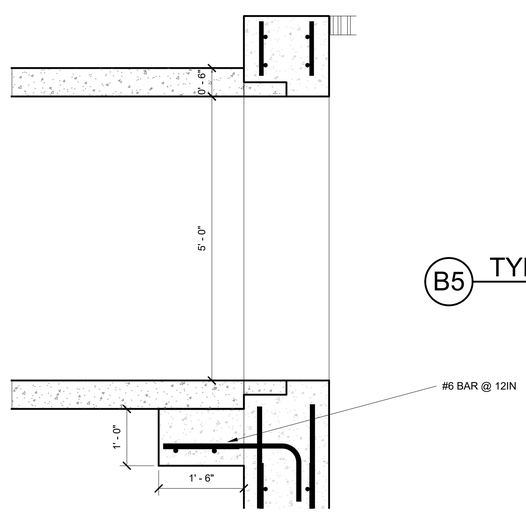

A3 5 X 5 CULVERT CONNECTION DETAIL

0 0.5' 1' 2' 3'

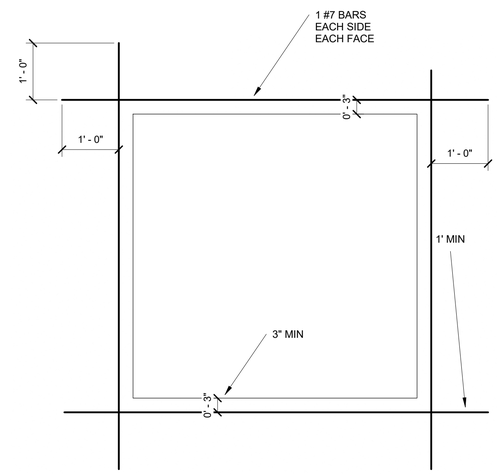

B5 TYP. REINF AROUND RECTANGULAR OPENING

0 0.5' 1' 2' 3'

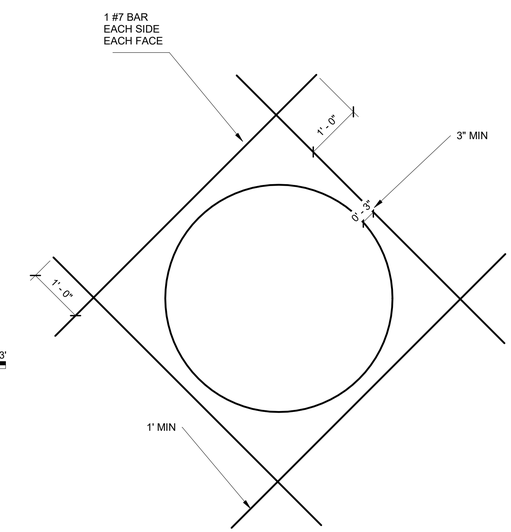

A8 REINF. AROUND CIRCULAR OPENING

0 0.5' 1' 2' 3'

US Army Corps of Engineers ®

MARK	DESCRIPTION	APPR	DATE

DESIGNED BY: KATHY SITKO
DRAWN BY: KATHY SITKO
CHECKED BY: JEREMY HARRIS
SUBMITTED BY: FAYE LEFFLER, PE
SIZE: ANSI 'D'

ISSUE DATE: NOVEMBER 2019
SOLICITATION NO.: W912P5-20-B-0002
CONTRACT NO.:
DRAWING CODE: XXXXXXXXXXX

US ARMY CORPS OF ENGINEERS
CHICAGO DISTRICT
231 S. LASALLE ST. SUITE 1500
CHICAGO, IL 60604

UPPER DES PLAINES RIVER
LEVEE 37 - PUMP STATION UPGRADE
MOUNT PROSPECT, ILLINOIS

CULVERT DETAILS

SHEET ID

S-508

G:\CADD\Levee 37_Pump Station Upgrade Project-113244\8_27_2019\LV 37 Structural 100%.rvt
1/27/2020 8:02:07 AM

FINAL DESIGN

GENERAL NOTES

1. CONTRACTOR MUST VERIFY ELEVATIONS OF EXISTING STRUCTURE AND ADJUST TO ELEVATION OF NEW STRUCTURE ADDITION ACCORDINGLY
2. MAINTAIN EXISTING SLOPE OF PIPE AT NEW STRUCTURE

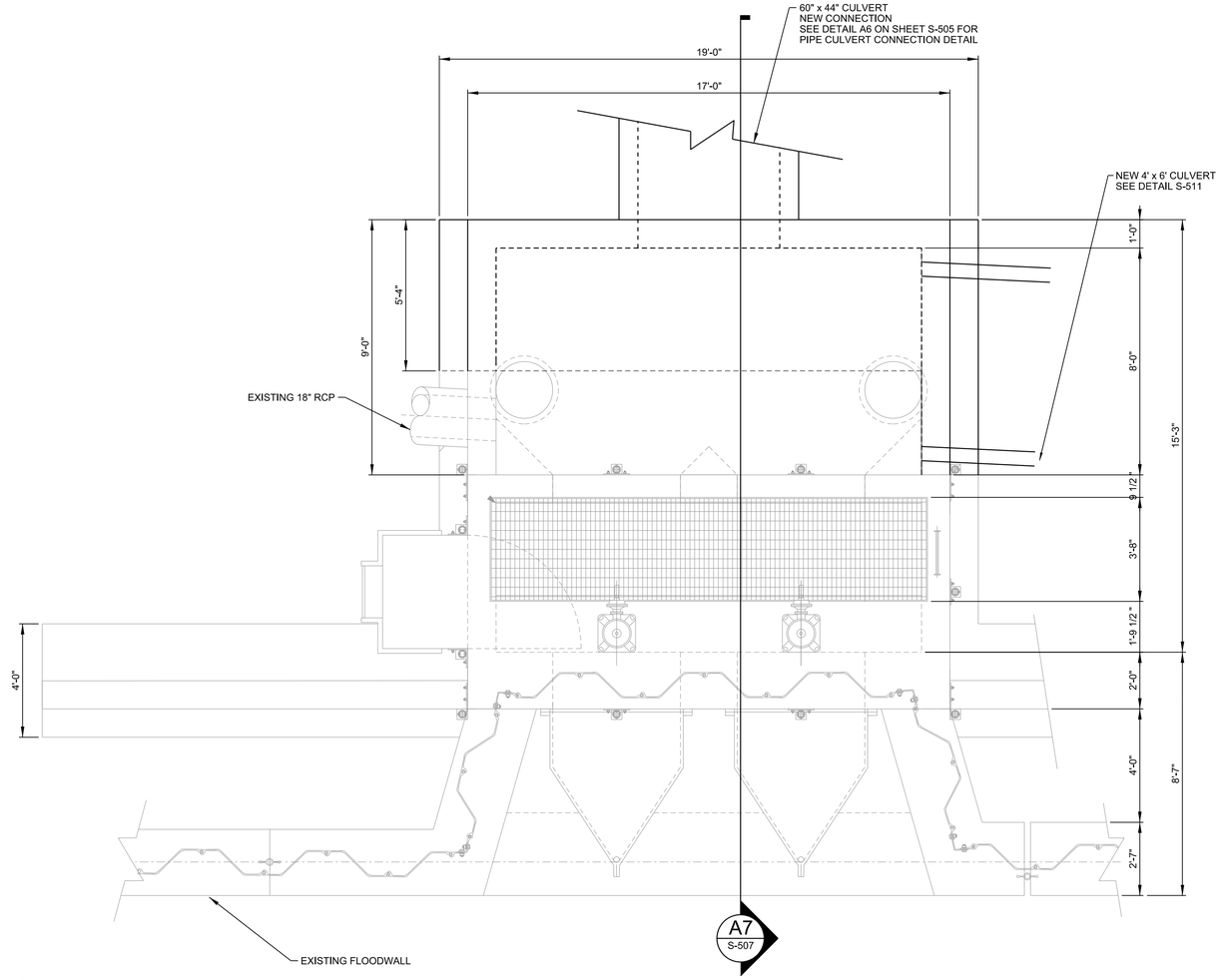

C1 ADDITIONS TO BACKFLOW STRUCTURE 1 MODIFICATION PLAN

SCALE: 3/8" = 1'

0 2' 4' 8'

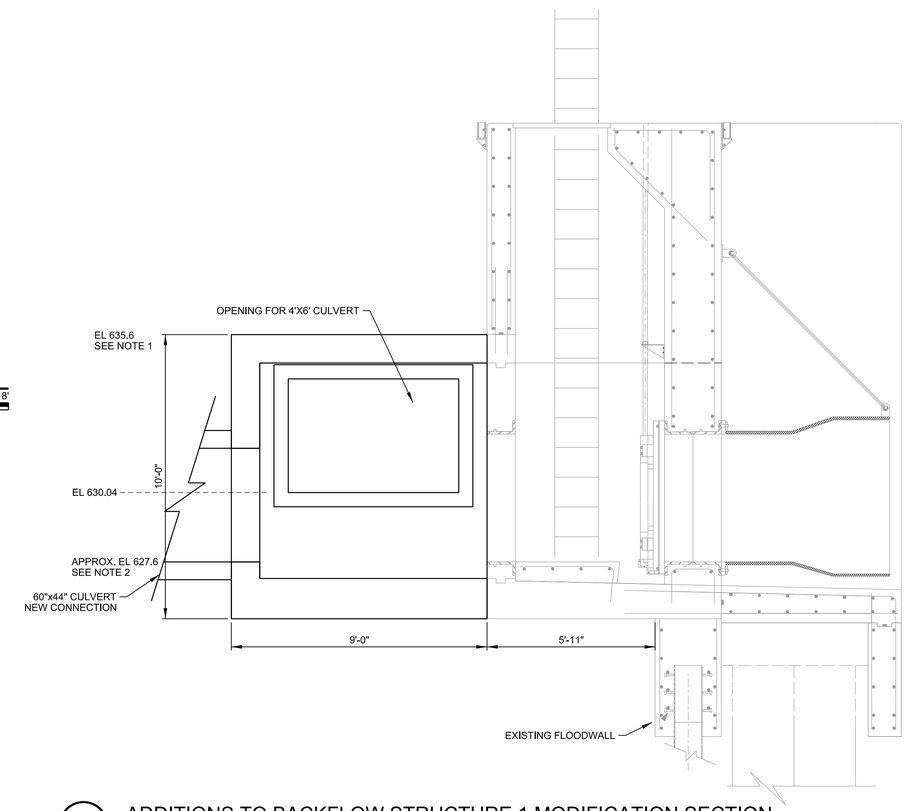

C1 S-507 A7 ADDITIONS TO BACKFLOW STRUCTURE 1 MODIFICATION SECTION

SCALE: 3/8" = 1'

0 2' 4' 8'

US Army Corps of Engineers®

MARK	DESCRIPTION	DATE

DESIGNED BY:	ISSUE DATE: 12/2018
DRAWN BY: JH	SOLICITATION NO.: W912P6-19-B-00XX
CHECKED BY: KS	CONTRACT NO.: W912P6-19-C-00XX
SUBMITTED BY:	PROJECT ID:
FAYE LEFTLER	PROJECT ID
SIZE:	FILE NAME: 113244_S-509.dgn

U.S. ARMY CORPS OF ENGINEERS
CHICAGO DISTRICT
231 S. LASALLE ST., SUITE 1500
CHICAGO, ILLINOIS 60604

UPPER DES PLAINES RIVER
LEVEE 37 - PUMP STATION UPGRADE
MOUNT PROSPECT, ILLINOIS

BACKFLOW STRUCTURE 1 MODIFICATION

SHEET ID

S-509

GENERAL NOTES

1. MAINTAIN EXISTING SLOPE OF PIPE AT NEW STRUCTURE ADDITION

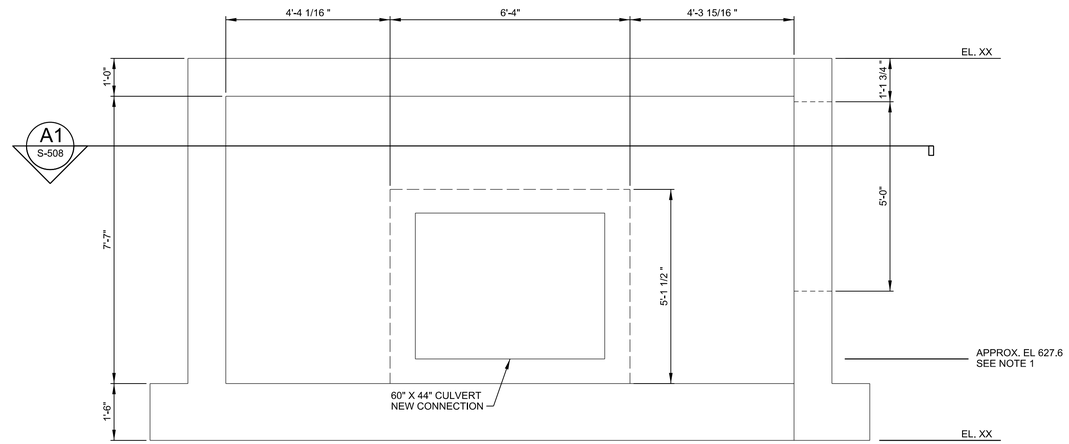

E3 ADDITIONS TO BACKFLOW STRUCTURE 1 - ELEVATION

SCALE: 1/2" = 1'

0 1' 2' 4'

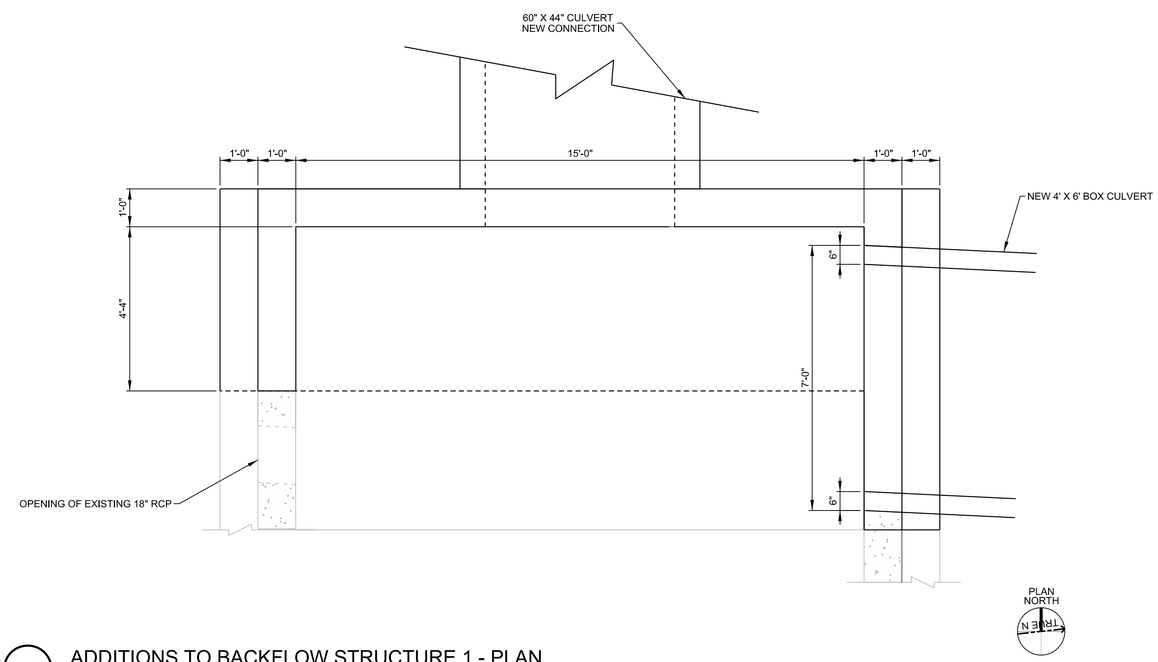

E3 S-508 A3 ADDITIONS TO BACKFLOW STRUCTURE 1 - PLAN

SCALE: 1/2" = 1'

0 1' 2' 4'

US Army Corps of Engineers®

MARK	DESCRIPTION	DATE

U.S. ARMY CORPS OF ENGINEERS
CHICAGO DISTRICT
231 S. LASALLE ST., SUITE 1500
CHICAGO, ILLINOIS 60604

DESIGNED BY: JEREMY HARRIS
DRAWN BY: JH
CHECKED BY: KS
SUBMITTED BY:
DATE LEFT FILE:
SIZE:
ISSUE DATE: 12/2018
SOLICITATION NO.: W912P6-19-B-00XX
CONTRACT NO.: W912P6-19-C-00XX
PROJECT ID:
PROJECT ID
FILE NAME: 113244 S-510.dgn

UPPER DES PLAINES RIVER
LEVEE 37 - PUMP STATION UPGRADE
MOUNT PROSPECT, ILLINOIS

BACKFLOW STRUCTURE 1 MODIFICATION DETAIL

SHEET ID

S-510

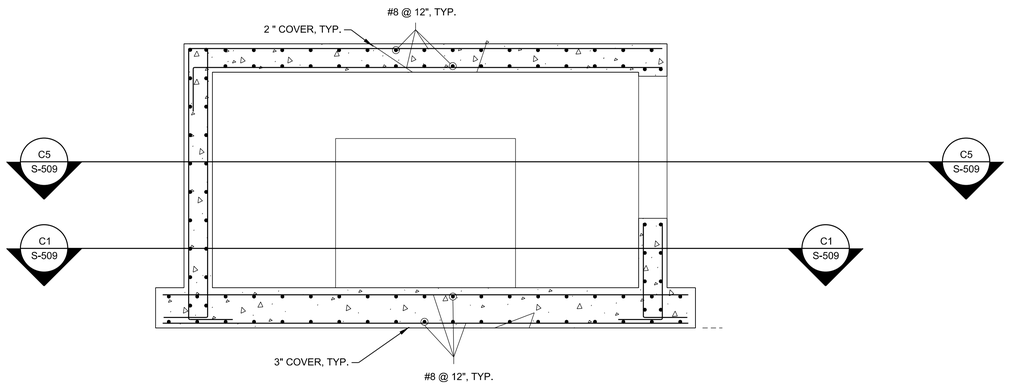

A1 S-509 **E1** ELEVATION SECTION OF BACKFLOW STRUCTURE 1 ADDITIONS
SCALE: 3/8" = 1'

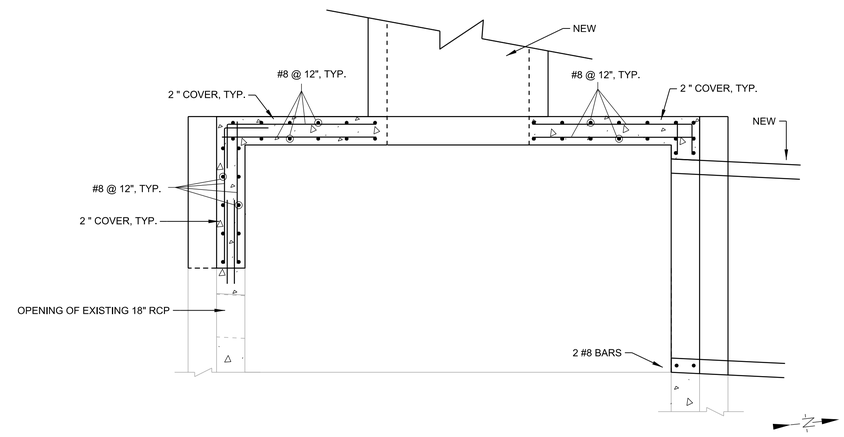

E1 S-509 **C5** SECTION OF BACKFLOW STRUCTURE 1 ADDITIONS
SCALE: 3/8" = 1'

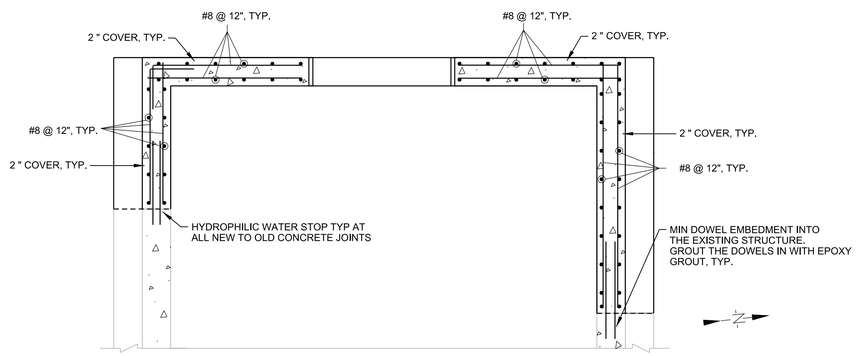

E1 S-509 **C1** SECTION OF BACKFLOW STRUCTURE 1 ADDITIONS
SCALE: 3/8" = 1'

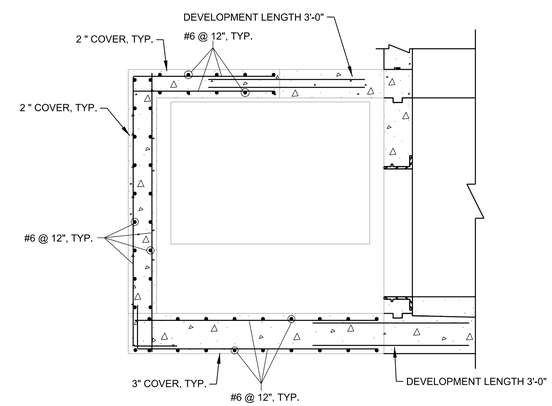

A1 S-509 **A7** ELEVATION SECTION OF BACKFLOW STRUCTURE 1 ADDITIONS
SCALE: 3/8" = 1'

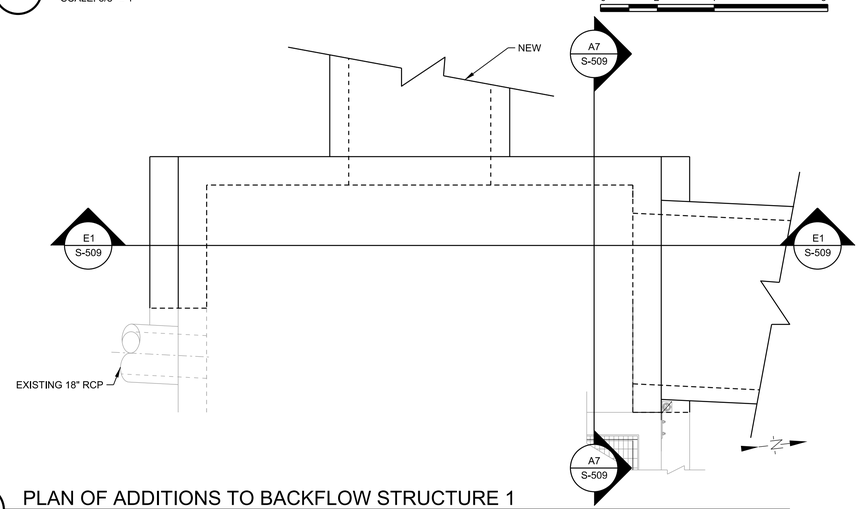

A1 PLAN OF ADDITIONS TO BACKFLOW STRUCTURE 1
SCALE: 3/8" = 1'

US Army Corps of Engineers®

MARK	DESCRIPTION	DATE

DESIGNED BY: JEREMY HARRIS
DRAWN BY: JH
CHECKED BY: KS
SUBMITTED BY: FAYE LEFFLER
SIZE: FILE NAME: 113244_S-511.dgn
ISSUE DATE: 12/2018
SOLICITATION NO.: W912P6-19-B-00XX
CONTRACT NO.: W912P6-19-C-00XX
PROJECT ID:
PROJECT ID

U.S. ARMY CORPS OF ENGINEERS
CHICAGO DISTRICT
231 S. LASALLE ST. SUITE 1500
CHICAGO, ILLINOIS 60604

UPPER DES PLAINES RIVER
LEVEE 37 - PUMP STATION UPGRADE
MOUNT PROSPECT, ILLINOIS

BACKFLOW STRUCTURE MODIFICATION DETAIL

SHEET ID
S-511

...\Levee 37_Pump Station Upgrade Project-113244\40 - Geospatial Data\Drawings\CAD_BIM_Sheets\Sheet File - Structural - Structural -
3:22:07 PM 1/27/2020 PD: AEC_pdf.pltcfg DS: AEC_Screen.dscript

General Notes:

INSTALL DUCKBILL VALVE IN ACCORDANCE WITH THE MANUFACTURER'S RECOMMENDATIONS AND THE GENERAL SPECIFICATIONS

REFER TO THE CIVIL SHEETS FOR RIPRAP AT HEADWALL OUTLET

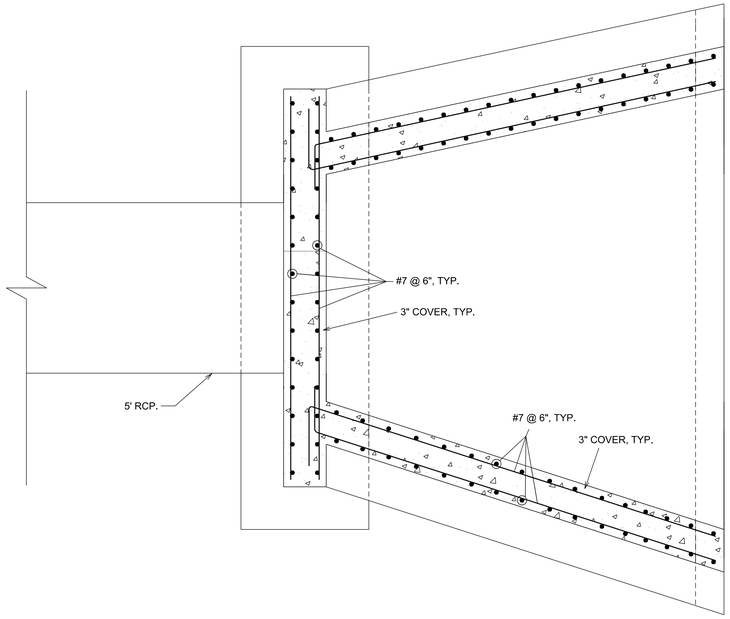

C5 / S-510 — D1 — HEADWALL PLAN SECTION
SCALE: 3/8" = 1'

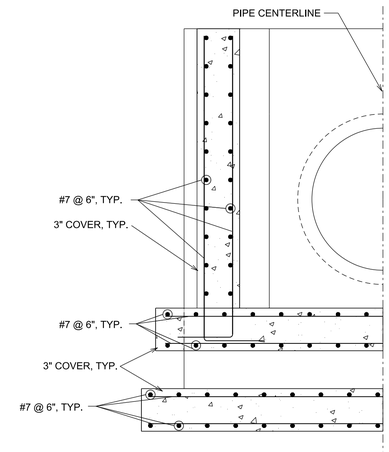

A3 / S-102 — D7 — HEADWALL ELEVATION SECTION
SCALE: 3/8" = 1'

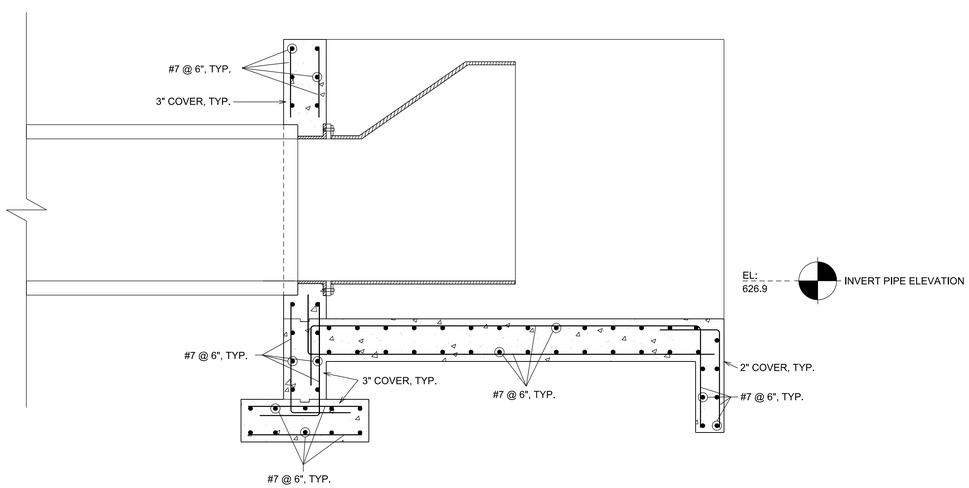

D8 / S-510 — A1 — HEADWALL ELEVATION SECTION
SCALE: 3/8" = 1'

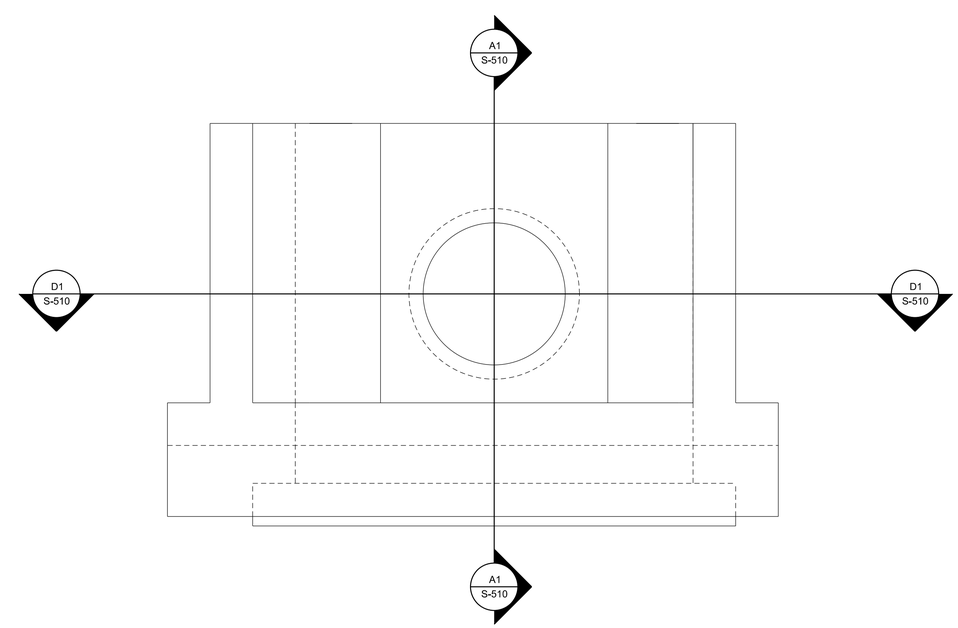

A6 — HEADWALL ELEVATION
SCALE: 3/8" = 1'

US Army Corps of Engineers®

MARK	DESCRIPTION	DATE

DESIGNED BY: JEREMY HARRIS
DRAWN BY: JH
CHECKED BY: KS
SUBMITTED BY: FAYE LEFTLER
SIZE: FILE NAME: 113244_S-512.dgn
ISSUE DATE: 12/2018
SOLICITATION NO.: W912P6-19-B-00XX
CONTRACT NO.: W912P6-19-C-00XX
PROJECT ID:
PROJECT ID

U.S. ARMY CORPS OF ENGINEERS
CHICAGO DISTRICT
231 S. LASALLE ST. SUITE 1500
CHICAGO, ILLINOIS 60604

UPPER DES PLAINES RIVER
LEVEE 37 - PUMP STATION UPGRADE
MOUNT PROSPECT, ILLINOIS

HEADWALL DETAIL

SHEET ID
S-512

...\Levee 37_Pump Station Upgrade Project-113244\40 - Geospatial Data\Drawings\CAD_BIM_Sheets\HEADWALL DETAIL
3:23:22 PM 1/27/2020 PD: AEC_pdf.pltcfg DS: AEC_Screen.dscript

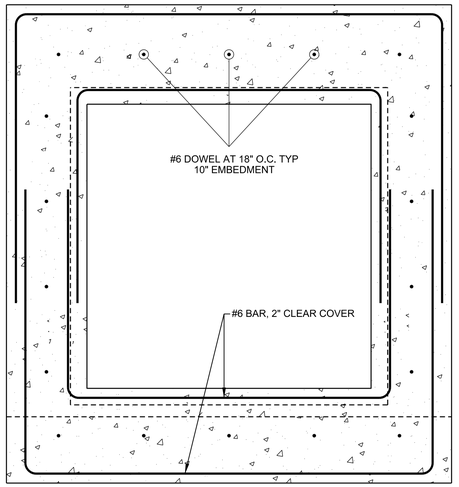

E7 S-513 **E1** CLOSURE STRUCTURE #6 ADDITION ELEVATION SECTION
SCALE: 3/4" = 1'

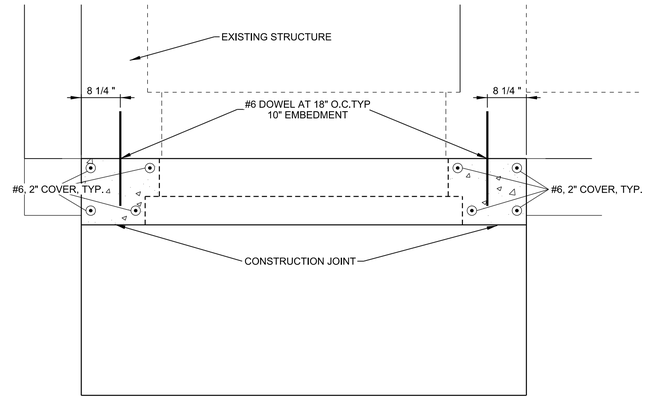

A7 S-513 **E4** CLOSURE STRUCTURE #6 ADDITION PLAN SECTION
SCALE: 3/4" = 1'

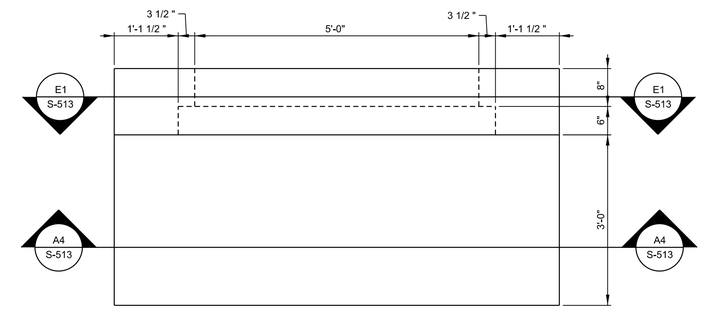

E7 CLOSURE STRUCTURE #6 ADDITION PLAN VIEW
SCALE: 3/4" = 1'

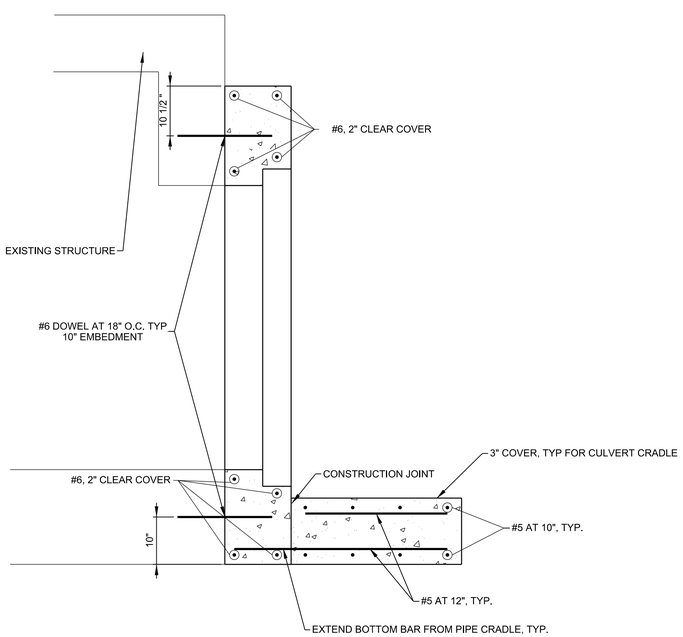

A7 S-513 **A1** CLOSURE STRUCTURE #6 ADDITION ELEVATION SECTION
SCALE: 3/4" = 1'

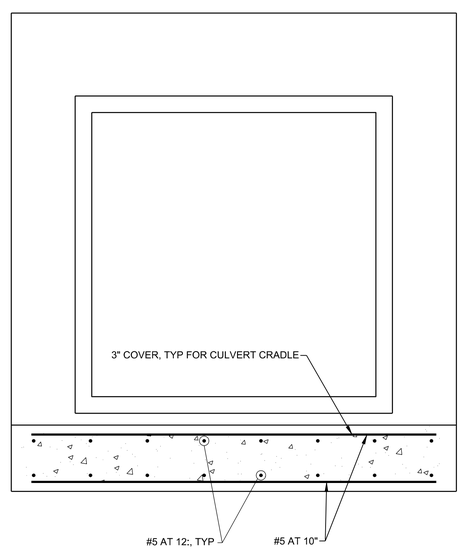

E7 S-513 **A4** CLOSURE STRUCTURE #6 ADDITION ELEVATION SECTION
SCALE: 3/4" = 1'

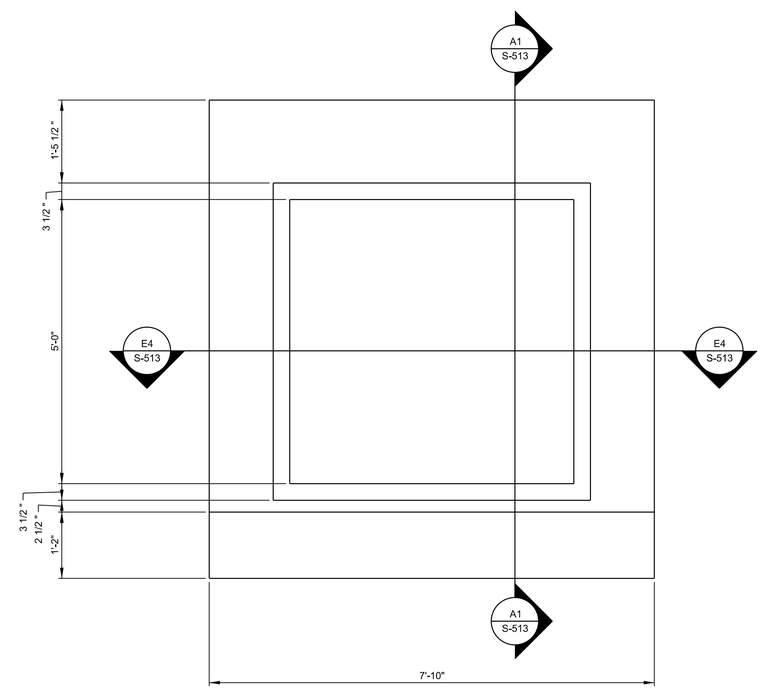

A7 CLOSURE STRUCTURE #6 ADDITION ELEVATION VIEW
SCALE: 3/4" = 1'

US Army Corps of Engineers®

MARK	DESCRIPTION	DATE

DESIGNED BY: JEREMY HARRIS
DRAWN BY: JH
CHECKED BY:
SUBMITTED BY:
DATE LETTER RE:
SIZE:
ISSUE DATE: 12/2018
SOLICITATION NO.: W912P6-19-B-00XX
CONTRACT NO.: W912P6-19-C-00XX
PROJECT ID:
PROJECT ID:
FILE NAME: 113244_S-513.dgn

U.S. ARMY CORPS OF ENGINEERS
CHICAGO DISTRICT
231 S. LASALLE ST. SUITE 1500
CHICAGO, ILLINOIS 60604

UPPER DES PLAINES RIVER
LEVEE 37 - PUMP STATION UPGRADE
MOUNT PROSPECT, ILLINOIS

CLOSURE STRUCTURE #6 ADDITIONS
REINFORCEMENT DETAIL

SHEET ID
S-513

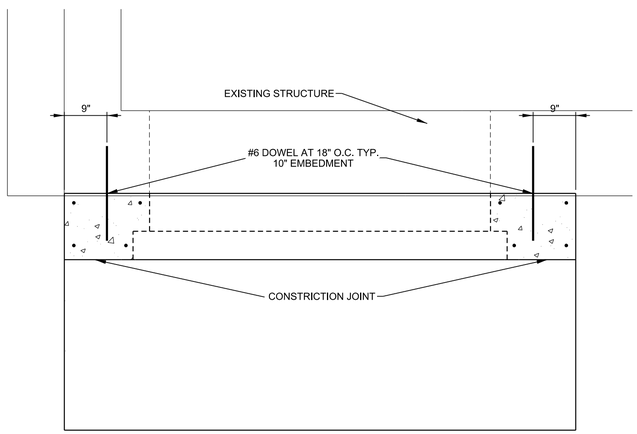

A7 S-514 D1 PUMP STATION #2 ADDITION PLAN SECTION
SCALE: 3/4" = 1'

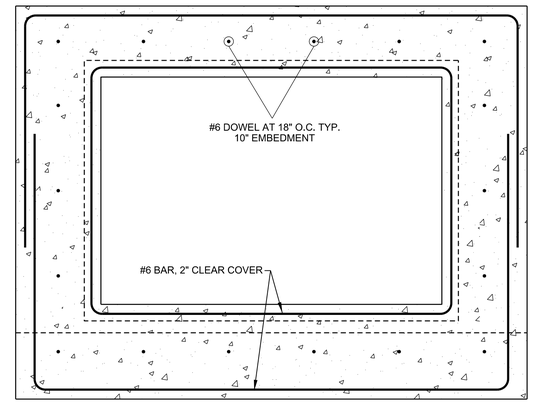

D7 S-514 D4 PUMP STATION #2 ADDITION ELEVATION SECTION
SCALE: 3/4" = 1'

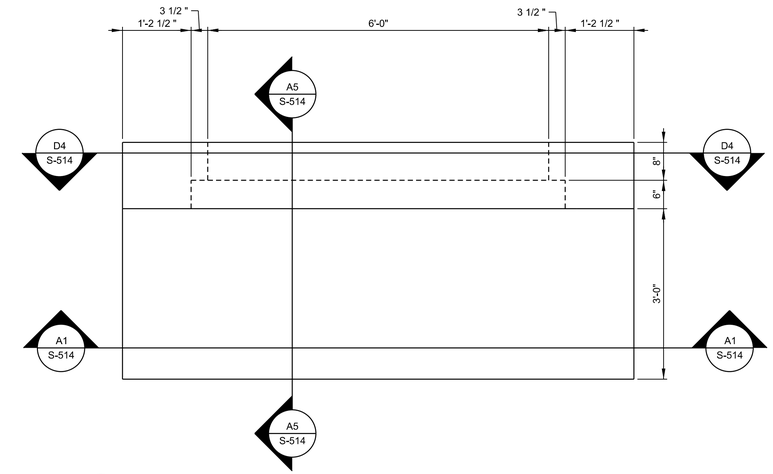

D7 PUMP STATION #2 ADDITION PLAN VIEW
SCALE: 3/4" = 1'

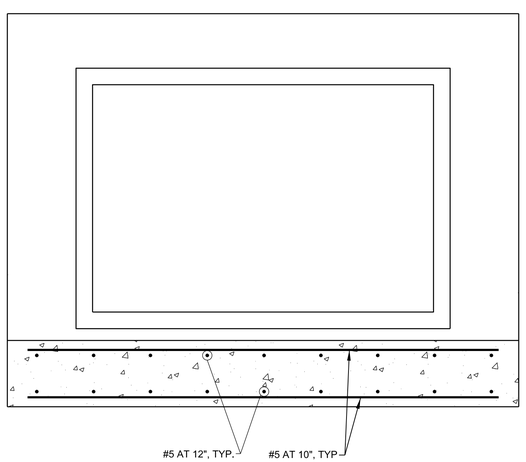

D7 S-514 A1 PUMP STATION #2 ADDITION ELEVATION SECTION
SCALE: 3/4" = 1'

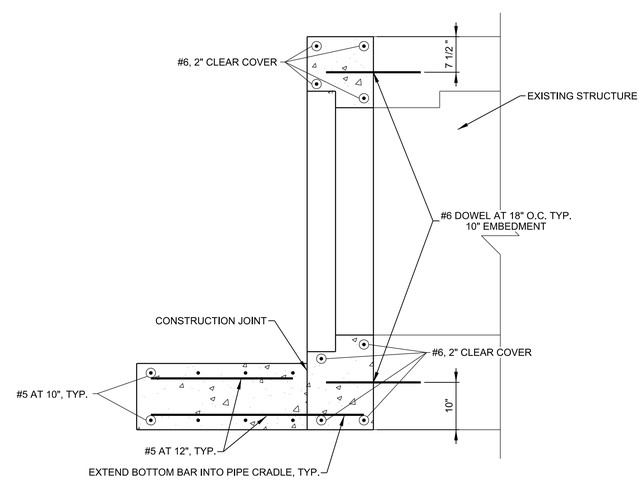

D7 S-514 A5 PS#2 ADDITION ELEVATION SECTION
SCALE: 3/4" = 1'

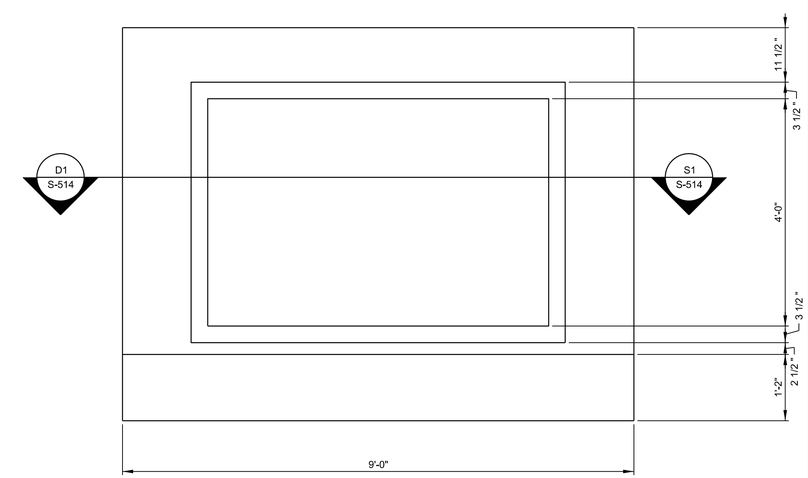

A7 PUMP STATION #2 ADDITION ELEVATION VIEW
SCALE: 3/4" = 1'

US Army Corps of Engineers®

MARK	DESCRIPTION	DATE

DESIGNED BY: JEREMY HARRIS
DRAWN BY: JH
CHECKED BY:
SUBMITTED BY: FAYE LEFFLER
SIZE: FILE NAME: 113244_S-514.dgn
ISSUE DATE: 12/20/18
SOLICITATION NO.: W912P6-19-B-00XX
CONTRACT NO.: W912P6-19-C-00XX
PROJECT ID: PROJECT ID

U.S. ARMY CORPS OF ENGINEERS
CHICAGO DISTRICT
231 S. LASALLE ST. SUITE 1500
CHICAGO, ILLINOIS 60604

UPPER DES PLAINES RIVER
LEVEE 37 - PUMP STATION UPGRADE
MOUNT PROSPECT, ILLINOIS

PUMP STATION #2 ADDITIONS
REINFORCEMENT DETAIL

SHEET ID
S-514

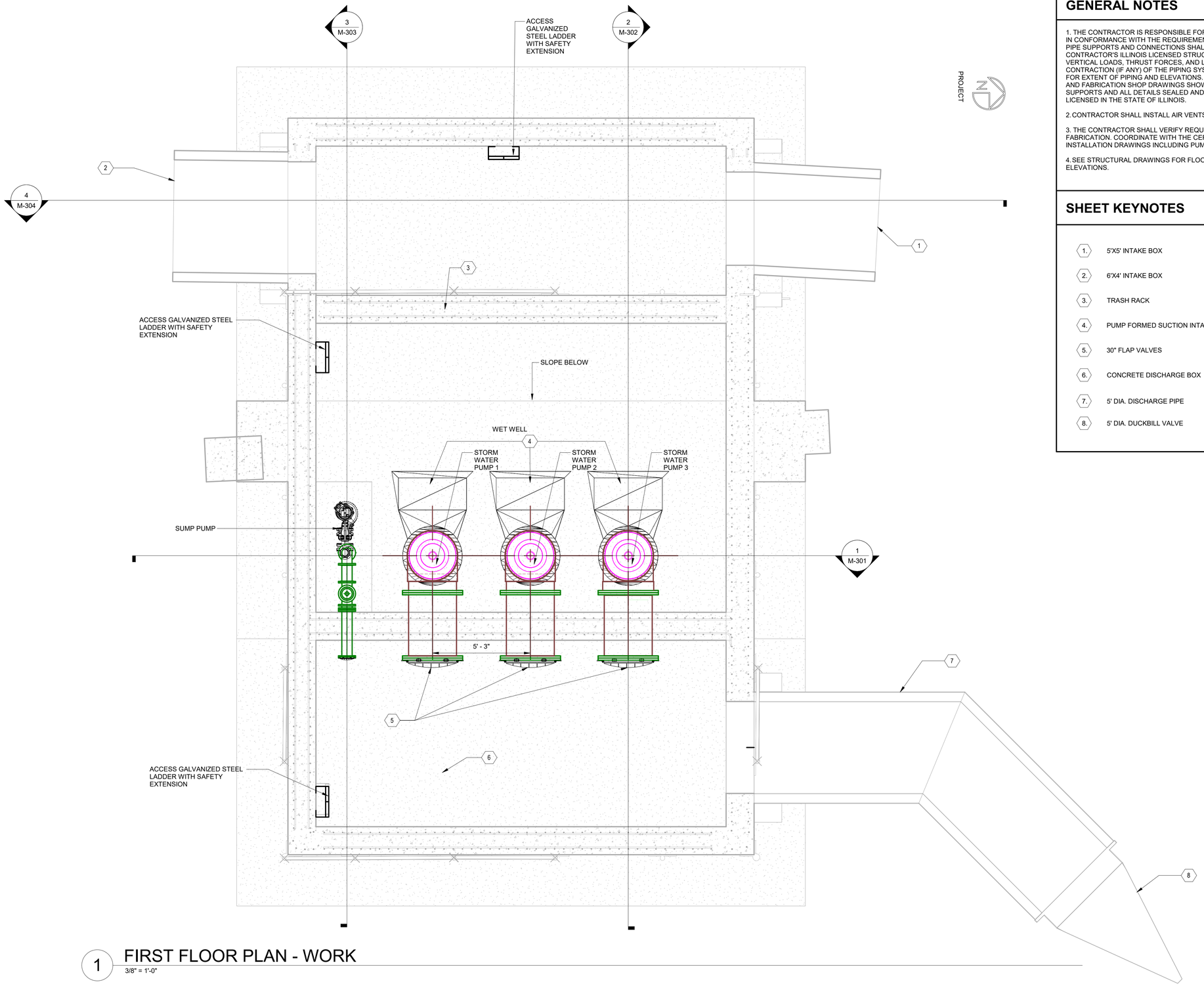

1 FIRST FLOOR PLAN - WORK

3/8" = 1'-0"

GENERAL NOTES

1. THE CONTRACTOR IS RESPONSIBLE FOR INSTALLATION OF PIPE SUPPORTS IN CONFORMANCE WITH THE REQUIREMENTS SET IN THE SPECIFICATIONS. ALL PIPE SUPPORTS AND CONNECTIONS SHALL BE DESIGNED BY THE CONTRACTOR'S ILLINOIS LICENSED STRUCTURAL ENGINEER FOR ALL VERTICAL LOADS, THRUST FORCES, AND LOADS FROM EXPANSION AND CONTRACTION (IF ANY) OF THE PIPING SYSTEM. SEE MECHANICAL DRAWINGS FOR EXTENT OF PIPING AND ELEVATIONS. SUBMIT CALCULATION, DRAWINGS AND FABRICATION SHOP DRAWINGS SHOWING LAYOUT OF THE PIPE, PIPE SUPPORTS AND ALL DETAILS SEALED AND SIGNED BY STRUCTURAL ENGINEER LICENSED IN THE STATE OF ILLINOIS.

2. CONTRACTOR SHALL INSTALL AIR VENTS AT ALL HIGH POINTS.

3. THE CONTRACTOR SHALL VERIFY REQUIRED PIPE LENGTH PRIOR TO FABRICATION. COORDINATE WITH THE CERTIFIED PUMP DIMENSIONS AND INSTALLATION DRAWINGS INCLUDING PUMP BASE.

4. SEE STRUCTURAL DRAWINGS FOR FLOOR AND WALL DIMENSIONS AND ELEVATIONS.

SHEET KEYNOTES

1. 5'X5' INTAKE BOX
2. 6'X4' INTAKE BOX
3. TRASH RACK
4. PUMP FORMED SUCTION INTAKE (FSI)
5. 30" FLAP VALVES
6. CONCRETE DISCHARGE BOX
7. 5' DIA. DISCHARGE PIPE
8. 5' DIA. DUCKBILL VALVE

US Army Corps of Engineers ®

MARK	DESCRIPTION	APPR	DATE

DESIGNED BY: KIRIL ZUMBULEV
DRAWN BY: KPC
CHECKED BY: LT
SUBMITTED BY: FLYNT LEFFLER, PE
SIZE: ANSI 'D'
ISSUE DATE: DECEMBER 2019
SOLICITATION NO.: W912P520B002
CONTRACT NO.:
DRAWING CODE: XXXXXXXXXXX

US ARMY CORPS OF ENGINEERS
CHICAGO DISTRICT
231 S. LASALLE ST. SUITE 1500
CHICAGO, IL 60604

UPPER DES PLAINES RIVER
LEVEE 37 - PUMP STATION UPGRADE
MOUNT PROSPECT, ILLINOIS
PUMP STATION PLAN VIEW

SHEET ID
M-101

G:\CADD\Levee 37_Pump Station Upgrade Project-113244\Master Models\CONTAINER_M_R2018.rvt
2/11/2020 8:38:11 AM

FINAL DESIGN

GENERAL NOTES

1. THE CONTRACTOR IS RESPONSIBLE FOR INSTALLATION OF PIPE SUPPORTS IN CONFORMANCE WITH THE REQUIREMENTS SET IN THE SPECIFICATIONS. ALL PIPE SUPPORTS AND CONNECTIONS SHALL BE DESIGNED BY THE CONTRACTOR'S ILLINOIS LICENSED STRUCTURAL ENGINEER FOR ALL VERTICAL LOADS, THRUST FORCES, AND LOADS FROM EXPANSION AND CONTRACTION (IF ANY) OF THE PIPING SYSTEM. SEE MECHANICAL DRAWINGS FOR EXTENT OF PIPING AND ELEVATIONS. SUBMIT CALCULATION, DRAWINGS AND FABRICATION SHOP DRAWINGS SHOWING LAYOUT OF THE PIPE, PIPE SUPPORTS AND ALL DETAILS SEALED AND SIGNED BY STRUCTURAL ENGINEER LICENSED IN THE STATE OF ILLINOIS.

2. CONTRACTOR SHALL INSTALL AIR VENTS AT ALL HIGH POINTS.

3. THE CONTRACTOR SHALL VERIFY REQUIRED PIPE LENGTH PRIOR TO FABRICATION. COORDINATE WITH THE CERTIFIED PUMP DIMENSIONS AND INSTALLATION DRAWINGS INCLUDING PUMP BASE.

4. SEE STRUCTURAL DRAWINGS FOR FLOOR AND WALL DIMENSIONS AND ELEVATIONS.

5. THE CONTROLS SHALL ALTERNATE THE STARTING ORDER OF THE PUMPS AFTER EVERY CYCLE OF OPERATION TO EVENLY DISTRIBUTE RUN TIME HOURS AND PROLONG THE LIFE OF THE PUMPS. A CYCLE OF OPERATION IS THE PERIOD FROM THE FIRST PUMP STARTS AND STOPS.

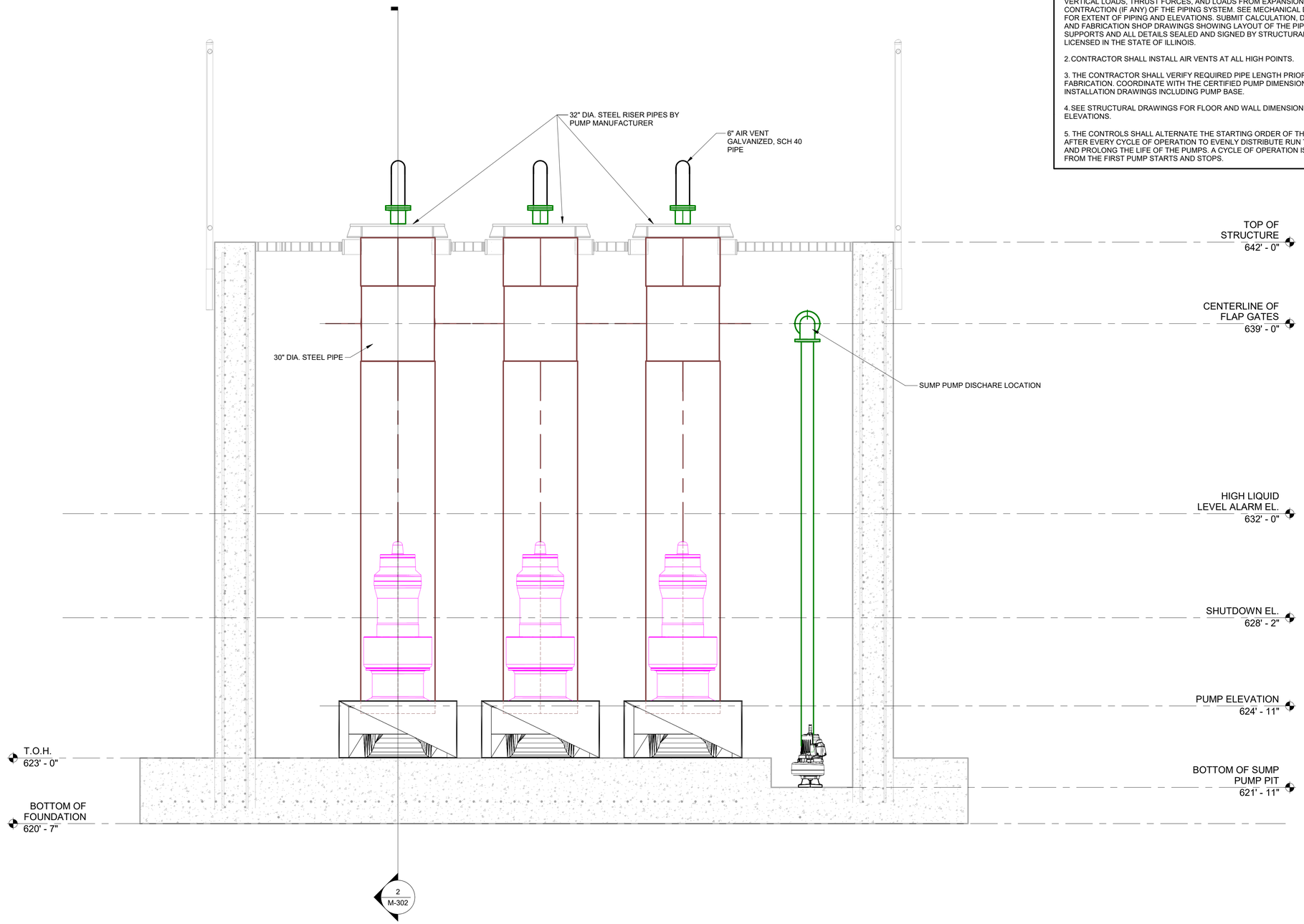

1 Section 1
1/2" = 1'-0"

US Army Corps of Engineers ®

MARK	DESCRIPTION	APPR	DATE

DESIGNED BY: KIRIL ZUMBULEV
DRAWN BY: KPC
CHECKED BY: LT
SUBMITTED BY: RICK LEFFLER, PE
SIZE: ANSI 'D'
ISSUE DATE: DECEMBER 2019
SOLICITATION NO.: W912P520B002
CONTRACT NO.:
DRAWING CODE: XXXXXXXXXXX

US ARMY CORPS OF ENGINEERS
CHICAGO DISTRICT
231 S. LASALLE ST., SUITE 1500
CHICAGO, IL 60604

UPPER DES PLAINES RIVER
LEVEE 37 - PUMP STATION UPGRADE
MOUNT PROSPECT, ILLINOIS
SECTION 1

SHEET ID
M-301

G:\CADD\Levee 37_Pump Station Upgrade Project-113244\Master Models\CONTAINER_M_R2018.rvt
2/11/2020 8:44:37 AM

FINAL DESIGN

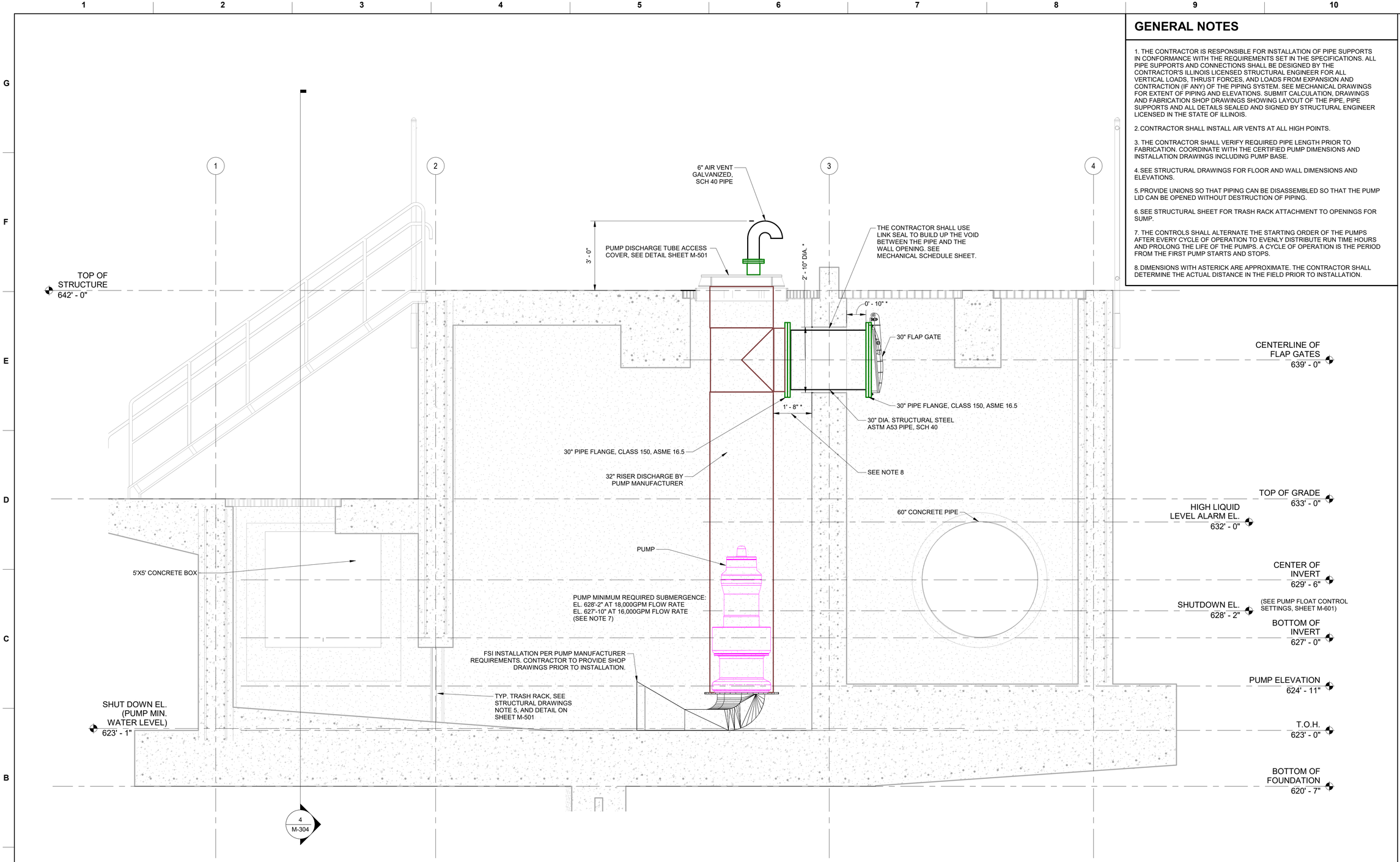

2 Section 2
1/2" = 1'-0"

GENERAL NOTES

1. THE CONTRACTOR IS RESPONSIBLE FOR INSTALLATION OF PIPE SUPPORTS IN CONFORMANCE WITH THE REQUIREMENTS SET IN THE SPECIFICATIONS. ALL PIPE SUPPORTS AND CONNECTIONS SHALL BE DESIGNED BY THE CONTRACTOR'S ILLINOIS LICENSED STRUCTURAL ENGINEER FOR ALL VERTICAL LOADS, THRUST FORCES, AND LOADS FROM EXPANSION AND CONTRACTION (IF ANY) OF THE PIPING SYSTEM. SEE MECHANICAL DRAWINGS FOR EXTENT OF PIPING AND ELEVATIONS. SUBMIT CALCULATION, DRAWINGS AND FABRICATION SHOP DRAWINGS SHOWING LAYOUT OF THE PIPE, PIPE SUPPORTS AND ALL DETAILS SEALED AND SIGNED BY STRUCTURAL ENGINEER LICENSED IN THE STATE OF ILLINOIS.

2. CONTRACTOR SHALL INSTALL AIR VENTS AT ALL HIGH POINTS.

3. THE CONTRACTOR SHALL VERIFY REQUIRED PIPE LENGTH PRIOR TO FABRICATION. COORDINATE WITH THE CERTIFIED PUMP DIMENSIONS AND INSTALLATION DRAWINGS INCLUDING PUMP BASE.

4. SEE STRUCTURAL DRAWINGS FOR FLOOR AND WALL DIMENSIONS AND ELEVATIONS.

5. PROVIDE UNIONS SO THAT PIPING CAN BE DISASSEMBLED SO THAT THE PUMP LID CAN BE OPENED WITHOUT DESTRUCTION OF PIPING.

6. SEE STRUCTURAL SHEET FOR TRASH RACK ATTACHMENT TO OPENINGS FOR SUMP.

7. THE CONTROLS SHALL ALTERNATE THE STARTING ORDER OF THE PUMPS AFTER EVERY CYCLE OF OPERATION TO EVENLY DISTRIBUTE RUN TIME HOURS AND PROLONG THE LIFE OF THE PUMPS. A CYCLE OF OPERATION IS THE PERIOD FROM THE FIRST PUMP STARTS AND STOPS.

8. DIMENSIONS WITH ASTERICK ARE APPROXIMATE. THE CONTRACTOR SHALL DETERMINE THE ACTUAL DISTANCE IN THE FIELD PRIOR TO INSTALLATION.

US Army Corps of Engineers ®

MARK	DESCRIPTION	APPR	DATE

DESIGNED BY: KIRIL ZUMBULIEV
DRAWN BY: KPC
CHECKED BY: LT
SUBMITTED BY: ELYZE LEFFLER, PE
SIZE: ANSI 'D'
ISSUE DATE: DECEMBER 2019
SOLICITATION NO.: W912P520B002
CONTRACT NO.:
DRAWING CODE: XXXXXXXXXXXX

US ARMY CORPS OF ENGINEERS
CHICAGO DISTRICT
231 S. LASALLE ST., SUITE 1500
CHICAGO, IL 60604

UPPER DES PLAINES RIVER
LEVEE 37 - PUMP STATION UPGRADE
MOUNT PROSPECT, ILLINOIS
SECTION 2

SHEET ID
M-302

G:\CADD\Levee 37_Pump Station Upgrade Project-113244\Master Models\CONTAINER_M_R2018.rvt
2/18/2020 11:50:05 AM

FINAL DESIGN

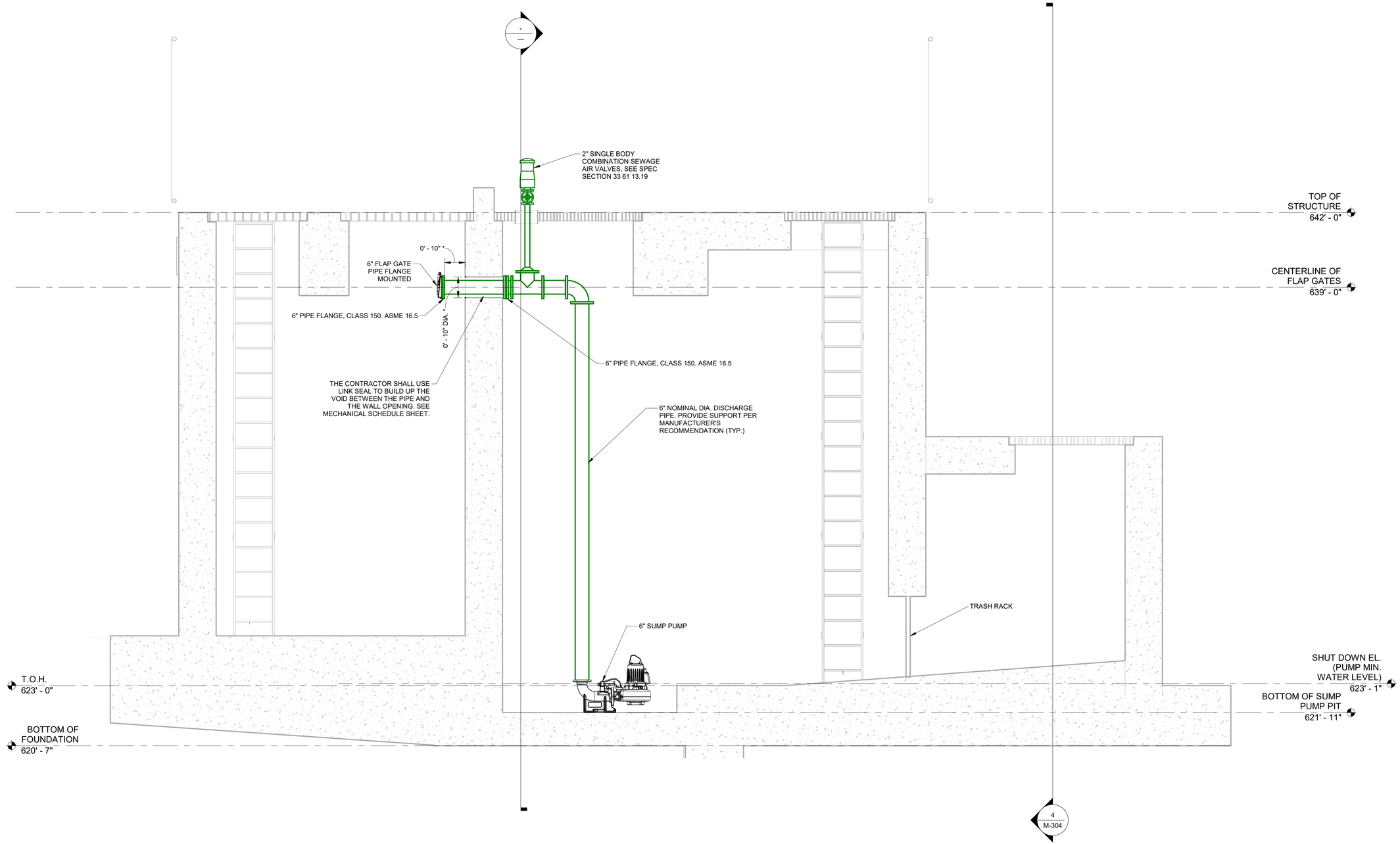

3 Section 3
1/2" = 1'-0"

US Army Corps of Engineers ®

MARK	DESCRIPTION	APPR	DATE

DESIGNED BY: KIRIL ZUMBULEV
DRAWN BY: KPC
CHECKED BY: FL
SUBMITTED BY: KAYE LEFLER, PE
SIZE: ANSI D
ISSUE DATE: DECEMBER 2019
SOLICITATION NO.: W912P520B002
CONTRACT NO.:
DRAWING CODE: XXXXXXXXXXXX

US ARMY CORPS OF ENGINEERS
CHICAGO DISTRICT
231 S. LASALLE ST. SUITE 1500
CHICAGO, IL 60604

UPPER DES PLAINES RIVER
LEVEE 37 - PUMP STATION UPGRADE
MOUNT PROSPECT, ILLINOIS
SECTION 3

SHEET ID
M-303

G:\CADD\Levee 37_Pump Station Upgrade Project-113244\Master Models\CONTAINER_M_R2018.rvt
1/28/2020 12:34:31 PM

FINAL DESIGN

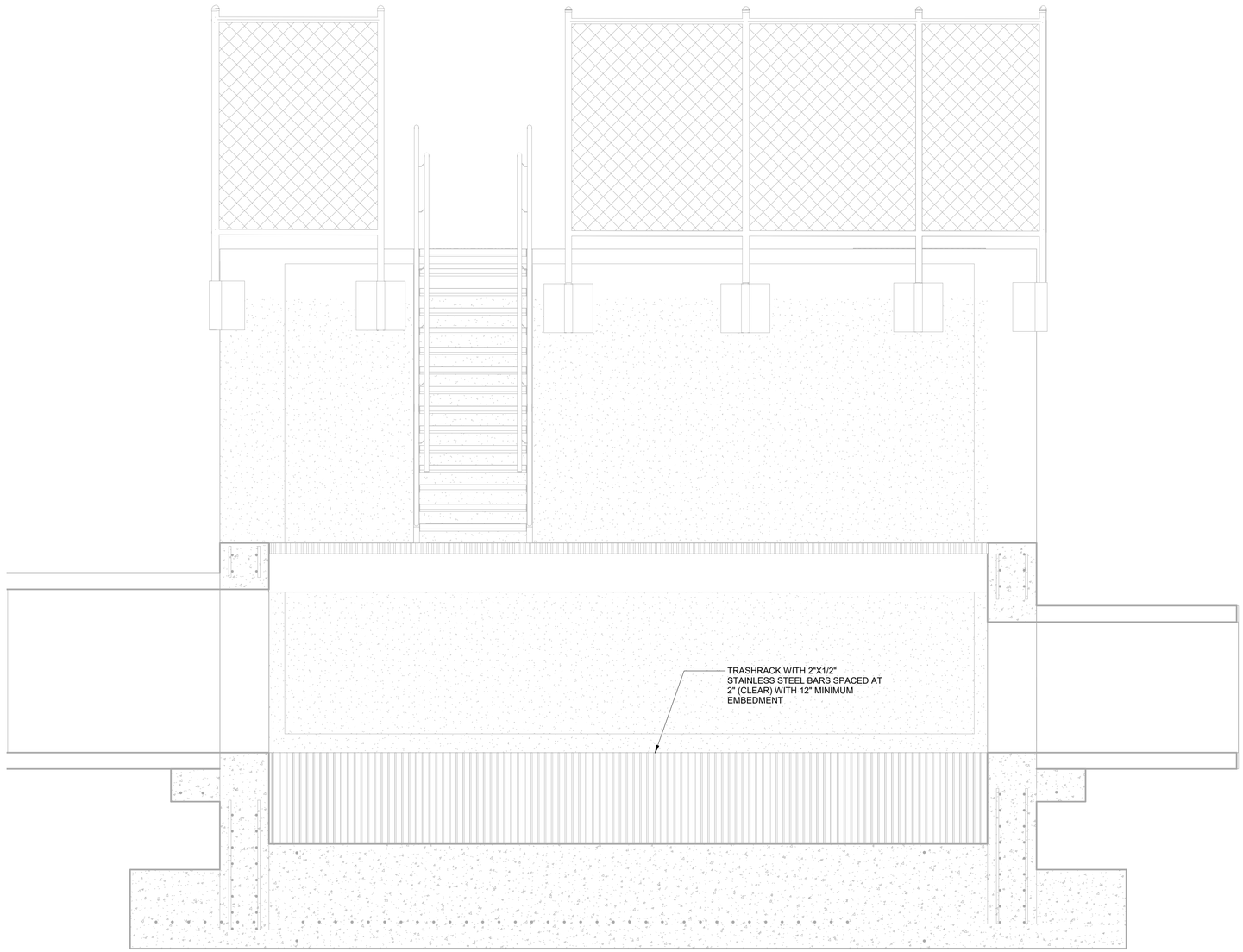

4 Section 4
1/2" = 1'-0"

US Army Corps of Engineers ®

MARK	DESCRIPTION	APPR	DATE

ISSUE DATE: DECEMBER 2019
SOLICITATION NO.: W912P520B002
CONTRACT NO.:
DRAWING CODE: XXXXXXXXXXX

DESIGNED BY: KIRIL ZUMBULEV
DRAWN BY: KPC
CHECKED BY: FL
SUBMITTED BY: FLOYD LEFFLER, PE
SIZE: ANSI 'D'

US ARMY CORPS OF ENGINEERS
CHICAGO DISTRICT
231 S. LASALLE ST, SUITE 1500
CHICAGO, IL 60604

UPPER DES PLAINES RIVER
LEVEE 37 - PUMP STATION UPGRADE
MOUNT PROSPECT, ILLINOIS
SECTION 4

SHEET ID
M-304

G:\CADD\Levee 37_Pump Station Upgrade Project-113244\Master Models\CONTAINER_M_R2018.rvt
1/24/2020 10:19:05 AM

FINAL DESIGN

Variant	Pump	Column diameter	Inlet Ø	R1	R2	A	B	C	Df	Dh	E	F	H	I	J	(L)	n	T	Weight	Material
	7065	800	630	150	413	473	263	630	975	920	1313	525	14	1661	14	1110	24	4	210.7	M0323.1312.00, M0326.2172.00
			24	5	16	18	10	24			51	20		65		43				

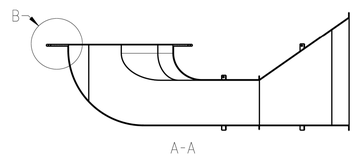

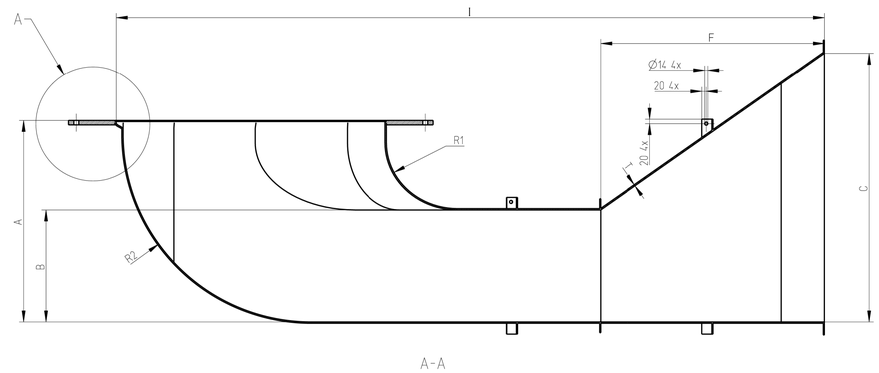

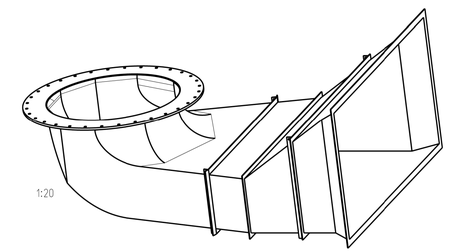

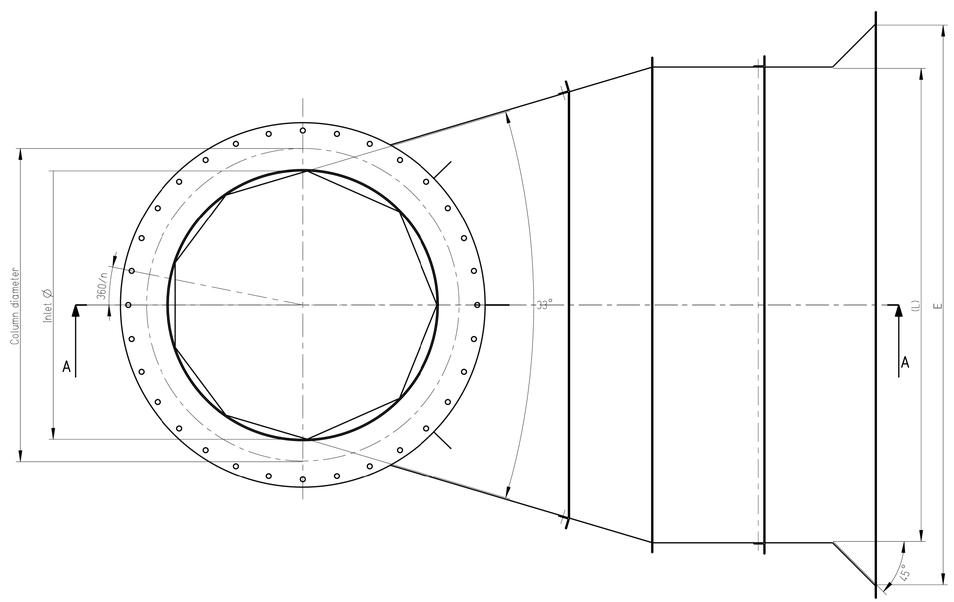

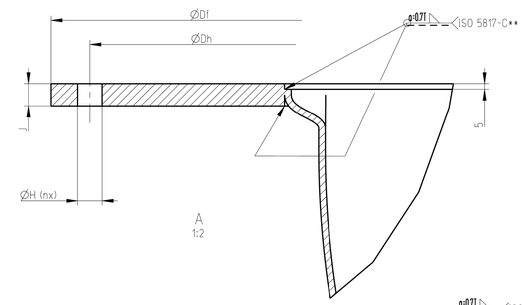

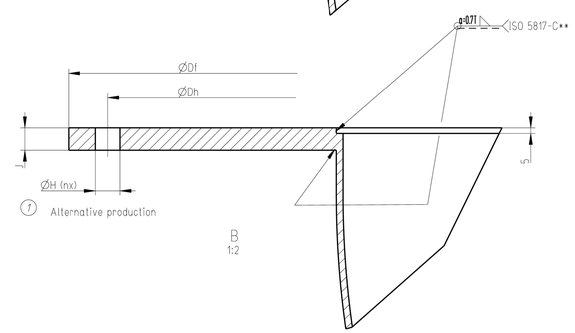

Tolerance's concerning lenght and diameter, ±2 if nothing else stated.
Tolerance's concerning plate thickness ±0.5, if nothing else stated.

Unless otherwise specified
0.71 ISO 5817-C**
**Air tight

US Army Corps of Engineers®

MARK	DESCRIPTION	DATE

DESIGNED BY: KIRIL ZLIMBULEV
DRAWN BY: KPC
CHECKED BY: FL
SUBMITTED BY:
FAYE LEFFLER
SIZE: ANSI D
FILE NAME: 113244 M-501.dgn
ISSUE DATE: 12/2018
SOLICITATION NO.: W912P6-19-B-00XX
CONTRACT NO.: W912P6-19-C-00XX
PROJECT ID:
PROJECT ID

U.S. ARMY CORPS OF ENGINEERS
CHICAGO DISTRICT
231 S. LASALLE ST. SUITE 1500
CHICAGO, ILLINOIS 60604

UPPER DES PLAINES RIVER
LEVEE 37 - PUMP STATION UPGRADE
MOUNT PROSPECT, ILLINOIS

FSI INLET CONE DETAIL

SHEET ID
M-501

A1 FSI INLET CONE DETAIL
SCALE: NTS

...\Levee 37_Pump Station Upgrade Project-113244\40 - Geospatial Data\Drawings\CAD_BIM_Sheets\113244_M-501.dgn
11:54:52 AM 1/28/2020 PD: AEC_pdf.pltcfg DS: AEC_Screen.dscript

GENERAL NOTES

1. SEE CIVIL AND STRUCTURAL DRAWINGS FOR LOCATION OF GATES.
2. THE WALL THIMBLE SHALL BE MADE BY THE GATE MANUFACTURER. THE THIMBLE MATERIAL SHALL BE THE SAME AS THE GATE MATERIAL, CAST IRON. "F" THIMBLE TYPE SHALL BE USED.

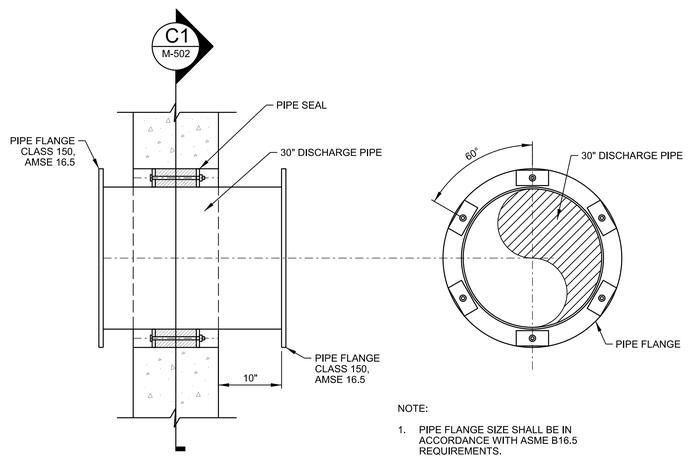

NOTE:

1. PIPE FLANGE SIZE SHALL BE IN ACCORDANCE WITH ASME B16.5 REQUIREMENTS.

C1 DISCHARGE PIPE WITH FLANGE

SCALE: 1" = 1'

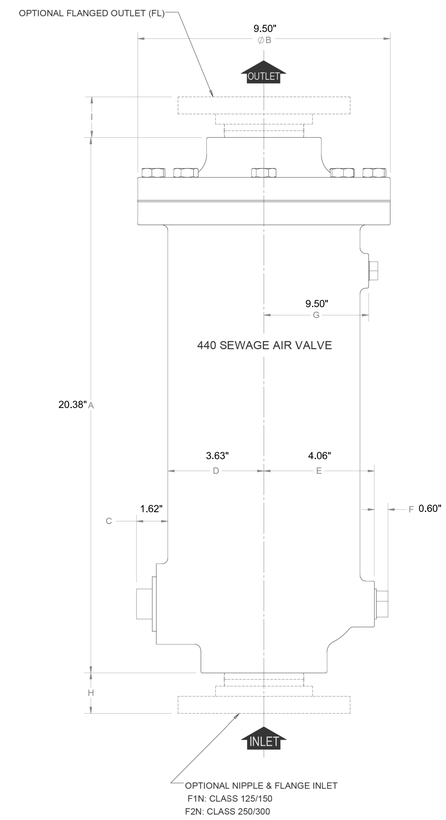

C5 SUMP PUMP AIR RELEASE VALVE DETAIL

SCALE: NTS

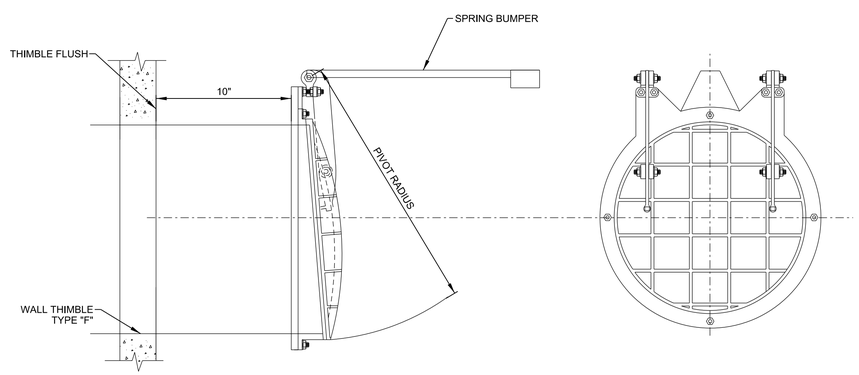

A1 FLAP GATE DETAIL

SCALE: 3/8" = 1'

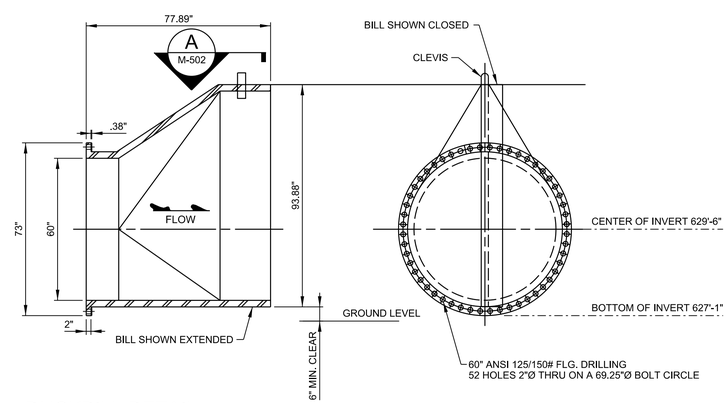

A5 DUCKBILL DETAIL

SCALE: 3/8" = 1'

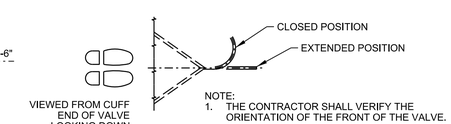

NOTE:
1. THE CONTRACTOR SHALL VERIFY THE ORIENTATION OF THE FRONT OF THE VALVE.

C5 M-502 A9 SECTION A

SCALE: NTS

US Army Corps of Engineers®

MARK	DESCRIPTION	DATE

DESIGNED BY: KIRIL ZLIMBULEV, PE
DRAWN BY: KPC
CHECKED BY: LCT
SUBMITTED BY: FAYE LEFTWICH, PE
SIZE: ANSI D
FILE NAME: 113244 M-502.dgn
ISSUE DATE: 12/2018
SOLICITATION NO.: W912P6-19-B-00XX
CONTRACT NO.: W912P6-19-C-00XX
PROJECT ID:
PROJECT ID

U.S. ARMY CORPS OF ENGINEERS
CHICAGO DISTRICT
231 S. LASALLE ST. SUITE 1500
CHICAGO, ILLINOIS 60604

UPPER DES PLAINES RIVER
LEVEE 37 - PUMP STATION UPGRADE
MOUNT PROSPECT, ILLINOIS

DETAILS 2

SHEET ID

M-502

GENERAL NOTES

1. SEE CIVIL AND STRUCTURAL DRAWINGS FOR LOCATION OF GATES.
2. THE CONTROLS SHALL ALTERNATE THE STARTING ORDER OF THE PUMPS AFTER EVERY CYCLE OF OPERATION TO EVENLY DISTRIBUTE RUN TIME HOURS AND PROLONG THE LIFE OF THE PUMPS. A CYCLE OF OPERATION IS THE PERIOD BETWEEN WHEN THE FIRST PUMP STARTS AND STOPS.

PUMPS

PUMP INFO					PUMP PERFORMANCE					MOTOR					
UNIT	QTY	PUMP TYPE	NUMBER OF BLADES	IMPELLER MATERIAL/DIAMETER (MM)	RATED FLOW	TDH AT DUTY POINT (FT)	EFFICIENCY	SHAFT POWER HP	NPSHR (FT)	RATED CURRENT (A)	NUMBER OF POLES	VOLTAGE UNITS	RATED HP	RATED RPM	LOCATION
STORM WATER PUMP	3	AXIAL FLOW PROPELLER PUMP, HIGH CAPACITY LOW HEAD	4	STAINLESS STEEL / 506	40 CFS	15	78%	88.1	22.2	172	8	460/3/60	135	880	WETWELL
DESIGN BASIS:	FLYGT AXIAL FLOW PROPELLER PUMP, HIGH CAPACITY LOW HEAD PUMPS, MODEL PL 7065/706 3~830 OR EQUAL														
SUBMERSIBLE PUMP	1	SUBMERSIBLE, SELF CLEANING PUMP	2	HARD IRON / 158	600GPM	17	62%	4.33	12.8	6.8	4	460/3/60	5	1745	WETWELL SUMP
DESIGN BASIS:	FLYGT SUBMERSIBLE SELF CLEANING PUMPS, MODEL NP 3102 LT 3~ ADAPTIVE 423 OR EQUAL														

60" DUCKBILL VALVE

UNIT	QTY	MODEL	DESIGN	MATERIAL	BACK RING	FLANG/FLANGE SIZE/FLANGE O.D. (IN)	DIMENSIONS L/H (IN)
60" DUCKBILL VALVE	1	SERIES 35-1	ECCENTRIC FLAT BOTTOM, INTEGRAL, ALL RUBBER FLANGE	EPDM	STAINLESS STEEL	ANSI B 16.10, CLASS 150/ 60 / 73	82/94
DESIGN BASIS	TIDEFLEX SERIES 35-1						

FLAP GATE SCHEDULE

GATE LOCATION	NO. OF GATES	OPENING SIZE DIA.(IN.)	PIVOT RADIUS (IN.)	SEAT TYPE/MATERIAL	COVER MATERIAL	PIVOT LUGS MATERIAL	LINKS	MOUNTING METHOD
30" PUMP DISCHARGE LINE	3	30	38.5	FLAT BACK/CAST IRON	CAST IRON	CAST IRON, CAST IN ONE PIECE	CAST IRON, CAST IN ONE PIECE	PIPE FLANGE
6" PUMP DISCHARGE LINE	3	6	11.75	FLAT BACK/CAST IRON	CAST IRON	CAST IRON, CAST IN ONE PIECE	CAST IRON, CAST IN ONE PIECE	PIPE FLANGE

PUMP FLOAT CONTROL SETTINGS

PUMP No.	RISING WET	FALLING WET
SWP-1	START = EL. 630'	STOP = EL. 629'-2"
SWP-2	START = EL. 631'	STOP = EL. 629'-2"
SWP-3	START = EL. 632'	STOP = EL. 629'-2"
DWP-1	START = MANUAL "ON" TO DISCHARGE WATER AT EL. 629'-2" AND BELOW THIS EL.	STOP = EL. 623'-1"
BOTTOM OF TRANSDUCER PIPE EL = 624'-6"		
HIGH LIQUID LEVEL ALARM EL. = 632'-6"		

WATERTIGHT LINK PIPESEAL

LOCATION	NO. OF LINKS NEEDED	TEMP. RANGE	PRESSURE	PRESSURE PLATES MATERIAL	SEAL MATERIAL	BOLT MATERIAL	WALL OPENING DIAMETER
30" DISCHARGE PIPE	32	-40 to +250	20psi	GLASS REINFORCED PLASTIC	EPDM	316 STAINLESS STEEL	34"
6" DISCHARGE PIPE	10	-40 to +250	20psi	GLASS REINFORCED PLASTIC	EPDM	316 STAINLESS STEEL	10"

NOTES:

1. THE CONTRACTOR SHALL PROVIDE A WALL OPENING WITH A SMOOTH SURFACE FINISH FOR THE 30" DISCHARGE PIPE AND THE THE 6" DISCHARGE PIPE (SEE STRUCTURAL SPECIFICATIONS).
2. THE 30" DISCHARGE PIPE AND THE 6" DISCHARGE PIPE SHALL BE SUPPORTED PRIOR TO LINK SEAL INSTALLATION (SEE NOTE 1, SHEET M-302).

US Army Corps of Engineers®

MARK	DESCRIPTION	DATE

DESIGNED BY: KIRIL ZLIMBULEV, PE
DRAWN BY: KPC
CHECKED BY: LCT
SUBMITTED BY: FAYE LEFFLER, PE
SIZE: ANSI D
FILE NAME: 113244_M-601.dgn
ISSUE DATE: MARCH 31, 2020
SOLICITATION NO.: W912P6-19-B-00XX
CONTRACT NO.: W912P6-19-C-00XX
PROJECT ID: PROJECT ID

U.S. ARMY CORPS OF ENGINEERS
CHICAGO DISTRICT
231 S. LASALLE ST. SUITE 1500
CHICAGO, ILLINOIS 60604

UPPER DES PLAINES RIVER
LEVEE 37 - PUMP STATION UPGRADE
MOUNT PROSPECT, ILLINOIS

SCHEDULES

SHEET ID
M-601

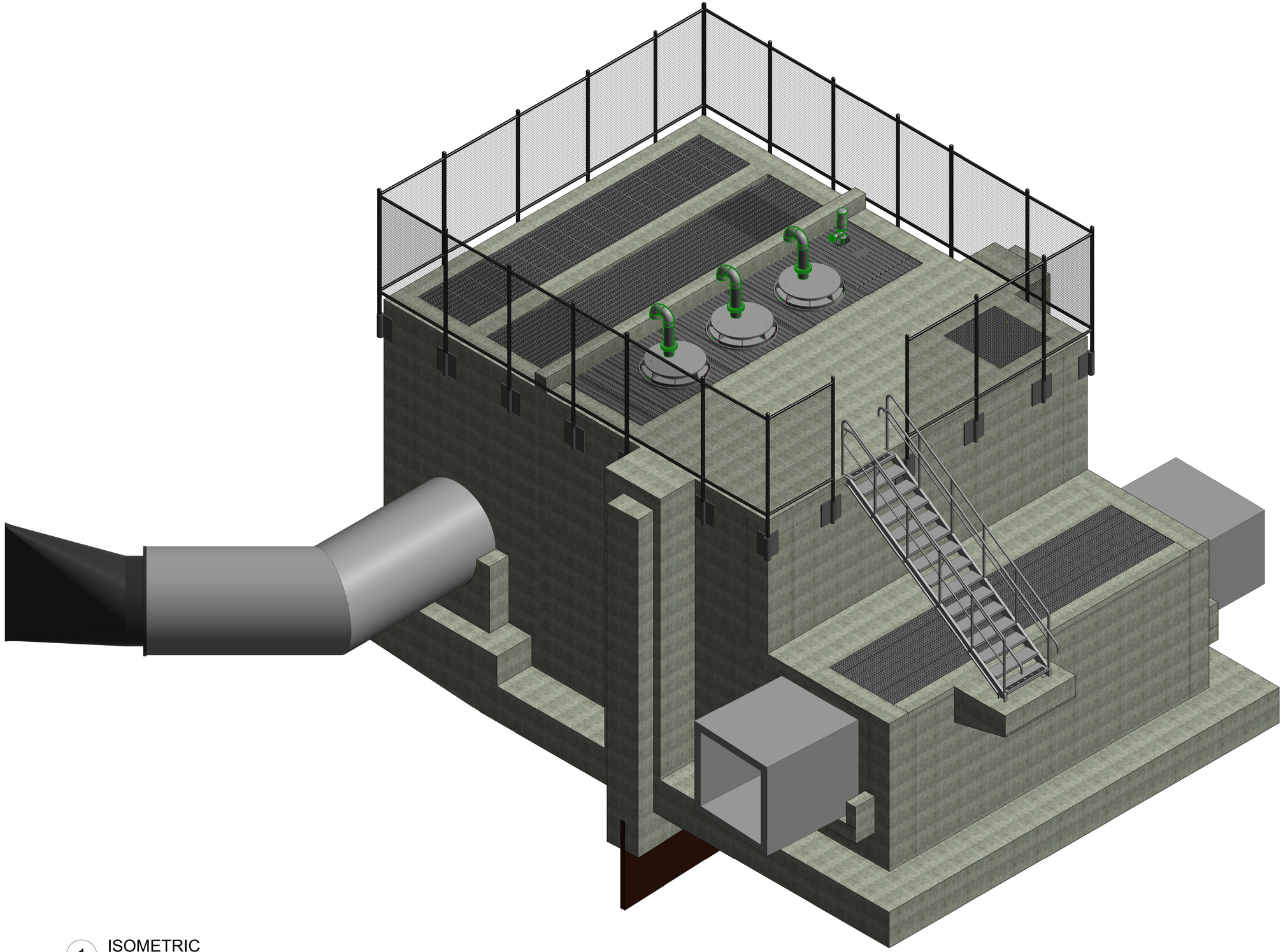

1 ISOMETRIC

US Army Corps of Engineers ®

MARK	DESCRIPTION	APPR	DATE

ISSUE DATE: DECEMBER 2019
SOLICITATION NO.: W912P520B002
CONTRACT NO.:
DRAWING CODE: XXXXXXXXXXX

DESIGNED BY: KIRIL ZUMBULEV
DRAWN BY: KPC
CHECKED BY: FL
SUBMITTED BY: FLOYD LEFFLER, PE
SIZE: ANSI 'D'

US ARMY CORPS OF ENGINEERS
CHICAGO DISTRICT
231 S. LASALLE ST, SUITE 1500
CHICAGO, IL 60604

UPPER DES PLAINES RIVER
LEVEE 37 - PUMP STATION UPGRADE
MOUNT PROSPECT, ILLINOIS

ISOMETRIC

SHEET ID

M-901

G:\CADD\Levee 37_Pump Station Upgrade Project-113244\Master Models\CONTAINER_M_R2018.rvt
1/28/2020 12:35:00 PM

FINAL DESIGN

POWER

- MOTOR, SIZE AS SHOWN.
- UNFUSED DISCONNECT SWITCH. SIZE AS SHOWN
- FUSED DISCONNECT SWITCH. SIZE FUSES FOR EQUIPMENT BASED ON MANUFACTURERS RECOMMENDATIONS
- KIRK KEY INTERLOCK SYSTEM
- WEATHERPROOF RECEPTACLE WITH GFCI BOX

EXTERIOR SITE

- PAD MOUNTED TRANSFORMER
- POLE MOUNTED LIGHTING FIXTURE
- OH — EXISTING OVERHEAD POWER LINE

ABBREVIATIONS

A	AMPERE
AC	ABOVE COUNTER, 42"AFF UNLESS OTHERWISE INDICATED
ADA	AMERICANS WITH DISABILITIES ACT
AFF	ABOVE FINISHED FLOOR
AL	ALUMINUM
1/C	ONE CONDUCTOR
C	CONDUIT
CB	CIRCUIT BREAKER
CKT	CIRCUIT
CU	COPPER
EF	EXHAUST FAN
EMT	ELECTRICAL METALLIC TUBING
EWC	ELECTRIC WATER COOLER
FACP	FIRE ALARM CONTROL PANEL
FM	FREQUENCY MODULATION
GFI	GROUND FAULT CIRCUIT INTERRUPTER
GFP	GROUND FAULT PROTECTION
HACR	HEATING AIR CONDITIONING REFRIGERATION
HP	HORSEPOWER
HPS	HIGH PRESSURE SODIUM
HT	HEIGHT
HZ	HERTZ
IDS	INTRUSION DETECTION SYSTEM
J	JUNCTION BOX
KWH	KILOWATT HOUR
LED	LIGHT EMITTING DIODE
MCB	MOLDED CASE CIRCUIT BREAKER
MH	METAL HALIDE
MLO	MAIN LUGS ONLY
MTD	MOUNTED
NEC	NATIONAL ELECTRICAL CODE
NF	NON FUSED
NO.	NUMBER
OS	OCCUPANCY SENSOR
PH	PHASE
PIR	PASSIVE INFRARED
RGS	RIGID GALVANIZED STEEL
SM	SINGLE MODE
TTB	TELEPHONE TERMINAL BOARD
TV	TELEVISION
TVSS	TRANSIENT VOLTAGE SURGE SUPPRESSOR
UNO	UNLESS NOTED OTHERWISE
V	VOLT
VA	VOLTAMPERE
VVD	VARIABLE VOLUME DAMPER
W	WATTS
WP	WATER PROOF
XFMR	TRANSFORMER

GENERAL NOTES

1. CONTRACTOR SHALL VERIFY EXISTING CONDITIONS PRIOR TO STARTING WORK. THESE DRAWINGS ARE GENERALLY DIAGRAMMATIC AND DO NOT SHOW ALL DETAILS REQUIRED FOR THE COMPLETE SYSTEM. THEY SHOULD HOWEVER BE FOLLOWED AS CLOSELY AS POSSIBLE IN THE GENERAL ARRANGEMENT AND LOCATION OF EQUIPMENT. ALL DIMENSIONS SHALL BE CHECKED AT THE SITE AND ALL STRUCTURAL AND FINISH CONDITIONS INVESITGATED. THE CONTRACTOR SHALL ARRANGE THEIR WORK TO MEET THESE CONDITIONS AND PROVIDE SUCH EQUIPMENT AND ACCESSORIES AS MAY BE REQUIRED. CONTRACTOR SHALL BE REQUIRED TO PROVIDE ALL EQUIPMENT FOR A FULLY FUNCTIONING SYSTEM.

2. BEFORE INSTALLING EQUIPMENT, MAKE FIELD MEASUREMENTS TO INSURE THAT ALL ITEMS OF EQUIPMENT FURNISHED WILL FIT INTO THE SPACE AS SHOWN ON THE DRAWINGS. WHERE EQUIPMENT WILL NOT FIT AS SHOWN ON THE DRAWINGS, PROVIDE A DRAWINGS TO THE CONTRACTING OFFICER FOR APPROVAL WITH A PROPOSED REVISED ARRANGEMENT BEFORE INSTALLING THE EQUIPMENT.

3. ADJUST EQUIPMENT AND FIXTURES TO AVOID INTERFERENCES WITH OTHER EQUIPMENT AND UTILITIES.

4. UPON DISCOVERY OF ANY DISCRPEANCY OR POINTS OF CONFLICT IN THE DRAWINGS OR THE SPECIFICATIONS, IMMEDIATELY NOTIFY THE CONTRACTING OFFICER IN WRITING. THE CONTRACTING OFFICER WILL CLARIFY SUCH DISCREPANCY OR POINTS OF CONFLICT IN WRITING PRIOR TO THE PROGRESS OF THE WORK BEYOND THE POINT CONCERNED.

5. PROPERLY SUPPORT ALL WORK AND EQUIPMENT INSTALLED UNDER THIS CONTRACT PLUMB AND PARALLEL WITH GRADE OR STRUCTURE LINES.STUDY ALL DRAWINGS, SHOP DRAWINGS, AND CATALOG DATA TO DETERMINE HOW EQUIPMENT, ACCESSORIES, PIPING, FIXTURES, AND RELATED ITEMS ARE TO BE SUPPORTED, MOUNTED, OR SUSPENDED. PROVIDE ALL BOLTS, INSERTS, PIPE STANDS, BRACKETS, STRUCTURAL SUPPORTS, AND ACCESSORIES FOR PROPER SUPPORT OF EQUIPMENT FURNISHED UNDER THIS CONTRACT. COORDINATE THE ELECTRICAL WITH ALL OTHER CONTRACTORS BEFORE BEGINNING WORK TO INSURE THAT THE ELECTRICAL WORK DOES NOT INTERFERE WITH OTHER WORK.

6. CONTRACTOR SHALL BE RESPONSIBLE FOR ALL CUTTING AND PATCHING FOR THEIR WORK.

7. THE CONTRACTOR SHALL FURNISH AND INSTALL ALL EQUIPMENT FOR THE CONSTRUCTION AND COMPLETION IN EVERY DETAIL OF THE WORK DESCRIBED, UNLESS OTHERWISE NOTED. IT IS FURTHER INTENDED THAT THE CONTRACTOR SHALL FURNISH ALL LABOR, SUPERVISION, MATERIALS,EQUIPMENT, TOOLS, TRANSPORTATION, SUPPLIES, TESTING AND INCIDENTALS REQUIRED TO COMPLETE THE WORK IN ACCORDANCE WITH THE DRAWINGS (PLANS), SPECIFICATIONS, AND TERMS OF THE CONTRACT.

8. THE CONTRACTOR SHALL OBTAIN AND PAY FOR ALL REQUIRED PERMITS, LICENSES, ETC., PRIOR TO COMMENCEMENT OF WORK. THE COST OF PERMITS, LICENSES, CONNECTIONS, ETC. SHALL BE THE RESPONSIBILITY OF THE CONTRACTOR AS STATED IN SPECIFICATION 01 10 00 GENERAL PROVISIONS.

9. ALL DAMAGES TO UTILITIES OR EXISTING STRUCTURES SHALL BE IMMEDIATELY REPORTED TO THE CONTRACTING OFFICER. THE CONTRACTING OFFICER SHALL DETERMINE WHETHER REPAIR OR REPLACEMENT IS NECESSARY. ALL REPAIR METHODS SHALL BE SUBMITTED TO THE CONTRACTING OFFICER FOR REVIEW AND APPROVAL PRIOR TO INITIATING THE WORK.

10. CONTRACTOR SHALL ATTEND THE CONSTRUCTION MEETINGS FOR THE DURATION OF THE PROJECT.

11. ANY ITEMS INSTALLED INCORRECTLY PER CONTRACT DOCUMENTS SHALL BE COMPLETELY REMOVED AND REPLACED AT THE CONTRACTOR'S EXPENSE.

12. CONTRACTOR SHALL PROVIDE THE DESIGNER THE FINALIZED POWER DISTRIBUTION EQUIPMENT TYPE AND SETTINGS. DESIGNER SHALL UTILIZE THE INFORMATION TO COMPLETE AN ARC FLASH HAZARD ANALYSIS AND COORDINATED SYSTEMS STUDIES. DESIGNER WILL PROVIDE PDFS OF THE ARC FLASH HAZARD WARNING LABELS FOR ALL POWER DISTRIBUTION EQUIPMENT TO THE CONTRACTOR. CONTRACTOR SHALL BE REQUIRED TO PRINT ARC FLASH HAZARD WARNING LABELS, AND APPLY THEM TO APPROPRIATE EQUIPMENT.

13. ALL ELECTRICAL WORK SHALL BE DONE IN ACCORDANCE WITH THE MOST RECENT EDITION OF NFPA 70 - NATIONAL ELECTRICAL CODE.

ELECTRICAL SAFETY NOTES

1. LOCAL "LOCKOUT/TAGOUT" PROCEDURES AND NFPA 70E SHALL BE COMPLIED WITH BY THE CONTRACTOR. SEE SPECIFICATION 01 35 26 GOVERNMENTAL SAFETY REQUIREMENTS.

2. NO WORK SHALL BE PERFORMED ON ENERGIZED ELECTRICAL CIRCUITS UNLESS PROOF IS PROVIDED THAT NO OTHER MEANS EXIST. IF IT IS DETERMINED THAT EQUIPMENT MUST BE WORKED ON IN AN ENERGIZED CONDITION, AN ENERGIZED WORK REQUEST SHALL BE SUBMITTED TO THE GOVENRNMENT VIA THE CONTRACTING OFFICER FOR ACCEPTANCE AND SHALL CONTAIN INFORMATION REQUIRED BY USACE EM 385-1-1 PARAGRAPH 11.A.02.C REFERENCE NFPA 70E.

3. ENERGIZED CIRCUITS: WHEN ENERGIZED WORK IS DEEMED ABSOLUTELY NECESSARY, IT SHOULD BE ACCOMPLISHED WITH EXTREME CAUTION AND ONLY WHEN THE BASIC ENERGIZED WORK PROCEDURES LISTED IN AFI 32-1064 ARE FOLLOWED AND REVIEWED WITH ALL PERSONNEL IMMEDIATELY BEFORE STARTING. ENERGIZED WORK SHALL NOT BE ALLOWED WITHOUT MEETING THE FOLLOWING REQUIREMENTS:

   A. SAFETY OFFICER MUST APPROVE ENERGIZED WORK IN ADVANCE.

   B. USE TWO-PERSON TEAMS TO PERFORM WORK.

   C. A QUALIFIED SUPERVISOR MUST BE CONSULTED AND MUST APPROVE ANY PLAN TO WORK ON ENERGIZED EQUIPMENT AND ENSURE PROPER USE OF PERSONAL PROTECTIVE EQUIPMENT.

   D. THE ENERGIZED WORK REQUEST MUST BE PREPARED IN ADVANCE.

   E. PLACE SPECIAL EMPHASIS ON PERSONAL PROTECTIVE EQUIPMENT AND APPROPRIATE SUPERVISION. PROPER SUPERVISION, TRAINING, AND PLANNING ARE PARAMOUNT TO ENSURE SAFETY.

   F. CONVENTIONAL CIRCUIT DE-ENERGIZING/RE-ENERGIZING METHODS (I.E., TURNING OFF/ON A SWITCH, OPENING AND CLOSING SWITCHES, OR OPERATING CIRCUIT BREAKERS/DISCONNECTS) FOR THE PURPOSE OF ISOLATING CIRCUITS IS CONSIDERED PERFORMING "ENERGIZED WORK" AND ALL THE PROCEDURES ABOVE SHALL BE FOLLOWED; HOWEVER, FOR THE PURPOSES OF THIS PARAGRAPH,BASE CIVIL ENGINEER APPROVAL IS GRANTED THROUGH A WRITTEN SAFE CLEARANCE FORM.

   G. WHILE THE JOB IS IN PROGRESS, AN ON-SITE SUPERVISOR MUST CLOSELY SUPERVISE THE WORKERS, CHECKING THEM CONSTANTLY TO MAKE SURE THEY ARE IN SAFE WORKING POSITIONS, HANDLING TOOLS SAFELY, AND COMPLYING WITH THE ENERGIZED WORK PERMIT.

4. UPON COMPLETION OF THE POWER DISTRIBUTION EQUIPMENT INSTALLATION, THE CONTRACTOR SHALL TURN OVER ALL POWER DISTRIBUTION EQUIPMENT INFORMATION INCLUDING MAKES, MODELS, AND SETTING OPTIONS FOR EQUIPMENT TO DESIGN ENGINEER. ADDITIONALLY, THE CONTRACTOR SHALL COORDINATE WITH UTILITY COMPANY TO OBTAIN BOTH THE AVAILABLE FAULT CURRENT AND LINE IMPEDENCE AT THE LOCATION OF THE SERVICE TRANSFORMER. ENGINEER SHALL UTILIZE ABOVE MENTIONED INFORMATION TO PROVIDE COORDINATION SYSTEM AND ARC FLASH HAZARD STUDIES FOR PUMP STATION.

   UPON COMPLETION OF ABOVE MENTIONED STUDIES, THE DESIGNER OF RECORD WILL PROVIDE DEVICE SETTINGS FOR ADJUSTABLE TRIP CIRCUIT BREAKERS TO THE CONTRACTOR FOR IMPLEMENTATION. DESIGNER OF RECORD WILL ALSO PROVIDE ARC FLASH WARNING LABELING TO CONTRACTOR WITH INSTRUCTION ON PLACEMENT UPON ELECTRICAL EQUIPMENT, INCLUDING SERVICE DISCONNECT, MOTOR CONTROL CENTER, AND SUBMERSIBLE JUNCTION BOXES. ADDITONALLY, THE DESIGNER OF RECORD WILL PROVIDE A STICKER INDICATING MAXIMUM AVAILABLE FAULT CURRENT AT SERVICE DISCONNECT PER DESIGNERS CALCULATIONS.CONTRACTOR SHALL COORDINATE THESE EFFORTS WITH THE GOVERNMENT.

5. MAIN CIRCUIT BREAKERS SHALL BE GFPE RATED. GROUND FAULT SENSING SHALL BE ZERO SEQUENCE SENSING TYPE. MAIN BREAKERS FOR ABOVE MENTIONED POWER DISTRIBUTION SYSTEMS SHALL ALSO HAVE SHORT DELAY PICKUP AND TIME SETTINGS, AS WELL AS INSTANTANEOUS SETTINGS.

LEGEND AND ABBREVIATIONS

NOT TO SCALE

US Army Corps of Engineers ®

MARK	DESCRIPTION	APPR	DATE

DESIGNED BY: M. LAWRENCE
DRAWN BY: MNL
CHECKED BY: JEFFREY TIMBAS, P.E.
SUBMITTED BY: DAVE LEFLER, PE
SIZE: ANSI 'D'
ISSUE DATE: NOVEMBER 2019
SOLICITATION NO.: TBD
CONTRACT NO.:
DRAWING CODE: XXXXXXXXXXXX

US ARMY CORPS OF ENGINEERS
CHICAGO DISTRICT
231 S. LASALLE ST. SUITE 1500
CHICAGO, IL 60604

UPPER DES PLAINES RIVER
LEVEE 37 - PUMP STATION UPGRADE
MOUNT PROSPECT, ILLINOIS
LEGEND, ABBREVIATIONS, AND GENERAL NOTES

SHEET ID
E-001

C:\Users\h2eddmnl\Documents\PS LV 37 ELEC_h2eddmnl.rvt
1/28/2020 2:17:15 PM

FINAL DESIGN

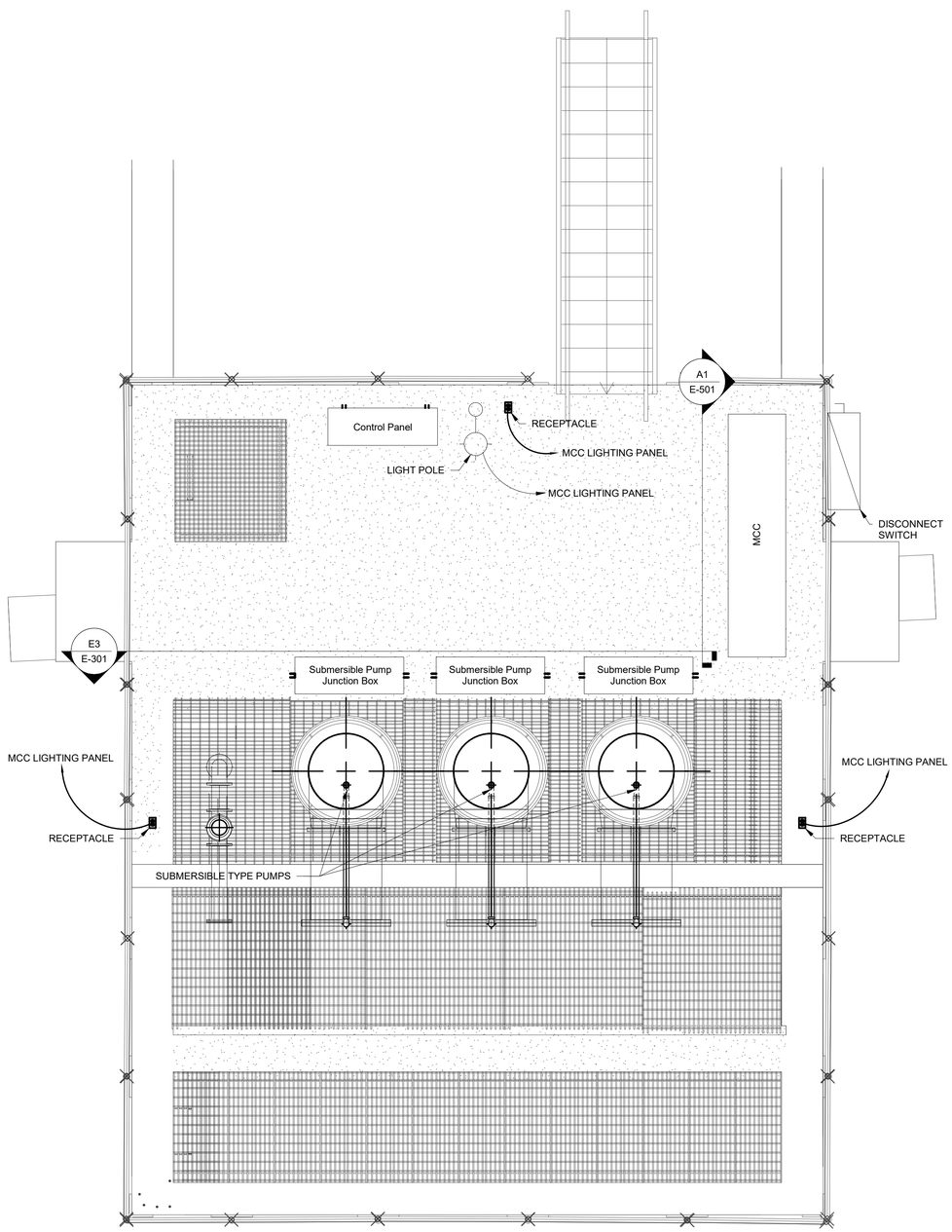

A1
E-101

TOP OF PUMP STATION

3/8" = 1'-0"

PLAN NORTH

GENERAL NOTES

1. FURNISH AND INSTALL A 6-SECTION 480V MOTOR CONTROL CENTER.
2. PROVIDE 4" CONCRETE PAD FOR MOTOR CONTROL CENTER (MCC). PAD SHALL EXTEND 2" PAST ALL SIDES OF MCC. ESTIMATED SIZE OF PAD IS 104"X25". FINAL SIZE OF PAD SHALL BE BASED ON THE SUBMITTED/APPROVED MCC AND DETERMINED BY THE CONTRACTOR IN THE FIELD DURING CONSTRUCTION.
3. ALL RECEPTACLES SHALL BE DUPLEX TYPE, 120 VAC, 20 AMP GFCI TYPE MOUNTED IN WEATHERPROOF BOXES. CONDUIT ROUTED TO RECEPTACLES SHALL BE EMBEDED IN STATION CONCRETE. RECEPTACLES SHALL BE MOUTED 8" ABOVE TOP OF STATION ON SLOTTED CHANNEL EMBEDDED INTO STRUCTURE CONCRETE. SLOTTED CHANNEL SHALL BE GALVANIZED STEEL.
4. CONTRACTOR SHALL DETERMINE MOST EFFICIENT CONDUIT ROUTING PATH. CONDUIT FOR EQUIPMENT NOT LOCATED WITHIN STATION SUMP SHALL NOT BE ROUTED THROUGH SUMP. ALL CONDUIT SHALL BE RIGID GALVANIZED STEEL (RGS).
5. PROVIDE 4/0 GROUNDING COUNTERPOISE ROUTED AROUND STATION. A MINIMUM OF 4-3/4" DIAMETER, 10' COPPER GROUNDING RODS SHALL BE DRIVEN AT THE CORNERS OF THE PUMP STATION STRUCTION A MINIMUM OF 18" BELOW GRADE. COPPER GROUND RODS SHALL BE BONDED TO COUNTERPOISE. ALL METALLIC STRUCTURES SHALL BE BONDED TO COUNTERPOISE WITH A MINIMUM 2/0 COPPER CONDUCTOR. GROUNDING RING NOT CURRENTLY SHOWN.
6. THE SUBMERSIBLE PUMP JUNCTION BOXES AND THE CONTROL PANEL SHALL BE RATED NEMA 3R.
7. THE SUBMERSIBLE PUMP JUNCTION BOXES SHALL BE MOUNTED ON THE OF THE JUNCTION BOXES IN ORDER TO LEAVE SPACE BETWEEN THE GRATING AND THE MOUNTING OF THE JUNCTION BOXES. THE SUBMERSIBLE PUMP JUNCTION BOXES SHALL BE POSITIONED SO THAT THE JUNCTION BOXES OPEN UP AWAY FROM THE PUMP AND MOTOR.

US Army Corps of Engineers ®

MARK	DESCRIPTION	APPR	DATE

US ARMY CORPS OF ENGINEERS
CHICAGO DISTRICT
231 S. LASALLE ST. SUITE 1500
CHICAGO, IL 60604

DESIGNED BY: M. LAWRENCE
DRAWN BY: MNL
CHECKED BY: JEFFREY TIMBAS, P.E.
SUBMITTED BY: FLOYD LEFFLER, PE
SIZE: ANSI 'D'
ISSUE DATE: NOVEMBER 2019
SOLICITATION NO.: TBD
CONTRACT NO.:
DRAWING CODE: XXXXXXXXXXX

UPPER DES PLAINES RIVER
LEVEE 37 - PUMP STATION UPGRADE
MOUNT PROSPECT, ILLINOIS
STATION PLAN

SHEET ID
E-101

C:\Users\h2eddmnl\Documents\PS LV 37 ELEC_h2eddmnl.rvt
1/28/2020 2:20:20 PM

FINAL DESIGN

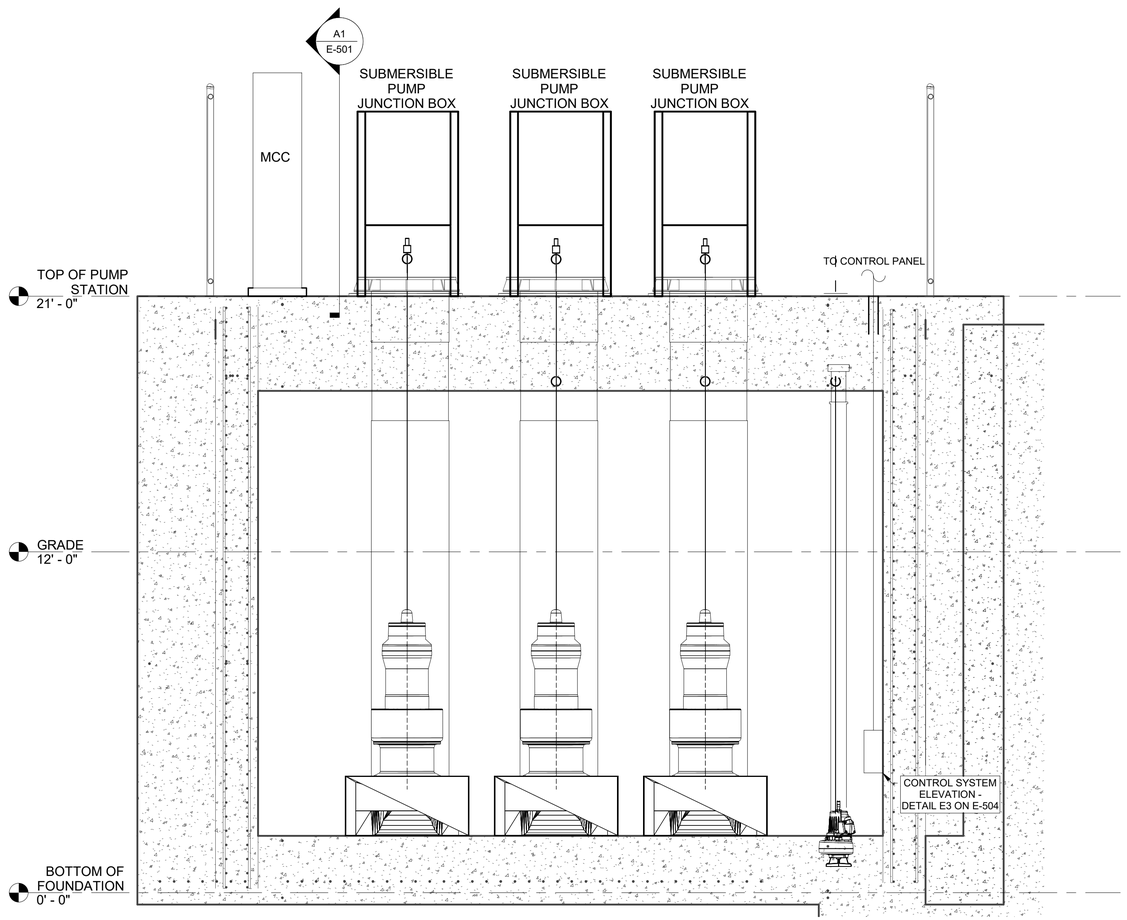

E3
E-301

SECTION OF PUMP STATION

3/8" = 1'-0"

GENERAL NOTES

1. SUBMERSIBLE CABLING FOR STORMWATER PUMPS SHALL BE ROUTED THROUGH RISER DISCHARGE AND EXIT THROUGH SUBMERSIBLE PUMP COVER PLATE AND ENTER SUBMERSIBLE PUMP JUNCTION BOX. FROM JUNCTION BOX, CABLING SHALL BE ROUTED VIA CONDUIT RACEWAY TO MOTOR CONTROL CENTER (POWER) OR CONTROL PANEL (CONTROL WIRING). CABLING FOR SUMP PUMP SHALL BE ROUTED VIA EMBEDDED CONDUIT TO MCC (POWER) OR CONTROL PANEL (STATUS SIGNALING). PROVIDE CONDUIT SEALING BUSHINGS FOR POWER AND CONTROL CABLING OF SUMP PUMP TO PREVENT MOISTURE INGRESS INTO MCC AND CONTROL PANEL. CABLING NOT PRESENTLY SHOWN).
2. FOR FURTHER INFORMATION ON JUNCTION BOX ASSEMBLY, SEE DETAIL 1 ON SHEET E-504.

US Army Corps of Engineers ®

MARK	DESCRIPTION	APPR	DATE

DESIGNED BY: M. LAWRENCE
DRAWN BY: MNL
CHECKED BY: JEFFREY TIMBAS, P.E.
SUBMITTED BY: FRANK LEFFLER, PE
SIZE: ANSI D
ISSUE DATE: NOVEMBER 2019
SOLICITATION NO.: TBD
CONTRACT NO.:
DRAWING CODE: XXXXXXXXXXX

US ARMY CORPS OF ENGINEERS
CHICAGO DISTRICT
231 S. LASALLE ST. SUITE 1500
CHICAGO, IL 60604

UPPER DES PLAINES RIVER
LEVEE 37 - PUMP STATION UPGRADE
MOUNT PROSPECT, ILLINOIS
STATION SECTION

SHEET ID
E-301

C:\Users\h2eddmnl\Documents\PS LV 37 ELEC_h2eddmnl.rvt
1/28/2020 2:20:34 PM

FINAL DESIGN

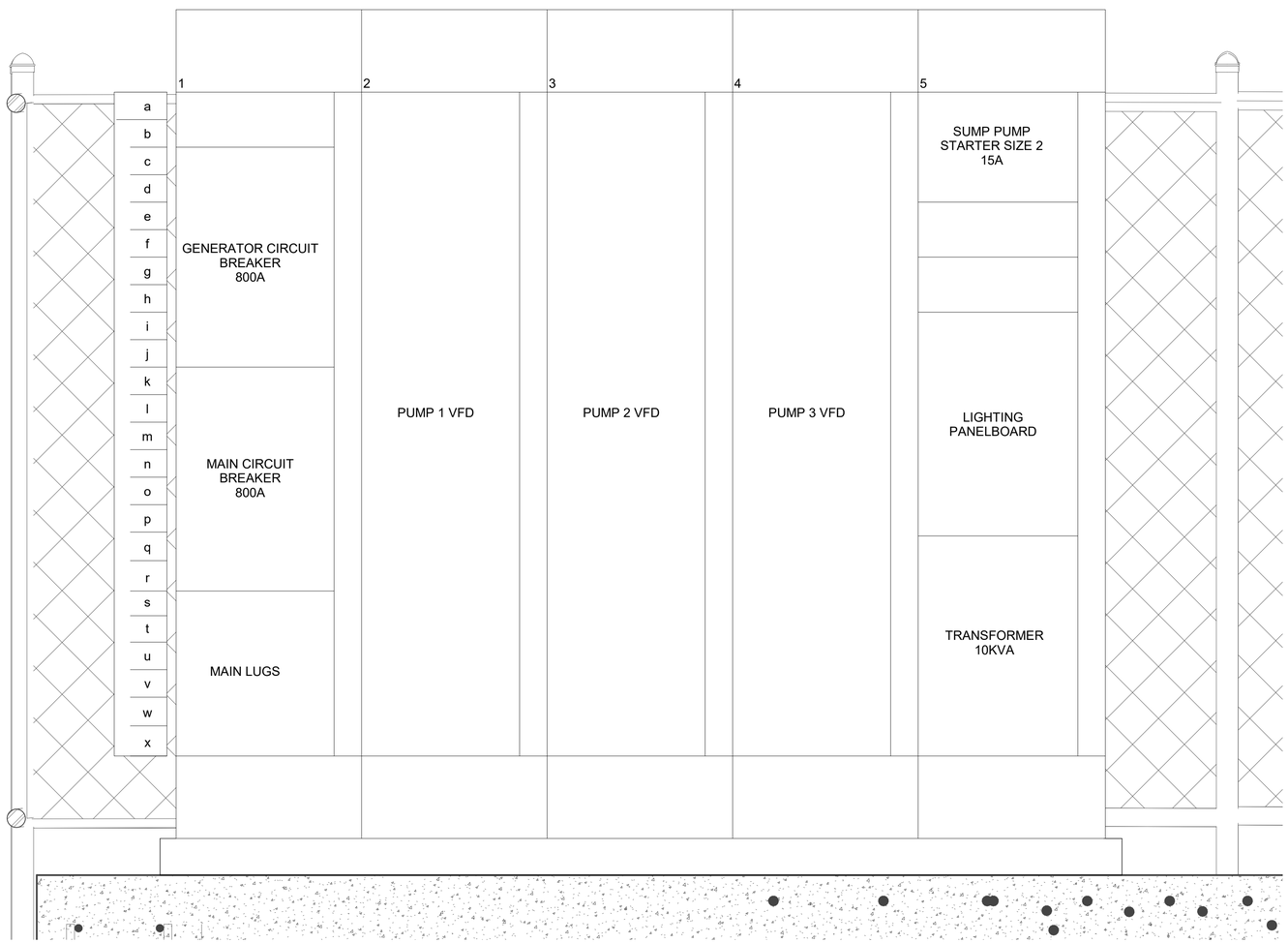

A1
E-501

MCC ELEVATION

1 1/2" = 1'-0"

GENERAL NOTES

1. SEE SHEET E-101 FOR LOCATION OF MOTOR CONTROL CENTER.
2. MOTOR CONTROL CENTER SHALL BE PROVIDED WITH A NEMA 3R NON-WALK IN TYPE ENCLOSURE. LOCKABLE SECURITY DOORS SHALL BE PROVIDED FOR EACH MCC SECTION, ALONG WITH A TOP MOUNTED DRIP SHIELD SPANNING ALL SECTIONS.
3. SECURITY DOORS NOT CURRENTLY SHOWN ON ELEVATION FOR CLARITY.
4. SEE SHEET E-601 FOR POWER ONE LINE DIAGRAM.

US Army Corps of Engineers ®

MARK	DESCRIPTION	APPR	DATE

DESIGNED BY: M. LAWRENCE
DRAWN BY: MNL
CHECKED BY: JEFFREY TIMBAS, P.E.
SUBMITTED BY: DAVID LEFFLER, PE
SIZE: ANSI D
ISSUE DATE: NOVEMBER 2019
SOLICITATION NO.: TBD
CONTRACT NO.:
DRAWING CODE: XXXXXXXXXXX

US ARMY CORPS OF ENGINEERS
CHICAGO DISTRICT
231 S. LASALLE ST. SUITE 1500
CHICAGO, IL 60604

UPPER DES PLAINES RIVER
LEVEE 37 - PUMP STATION UPGRADE
MOUNT PROSPECT, ILLINOIS
MCC ELEVATION

SHEET ID
E-501

C:\Users\h2eddmnl\Documents\PS LV 37 ELEC_h2eddmnl.rvt
1/28/2020 2:20:39 PM

FINAL DESIGN

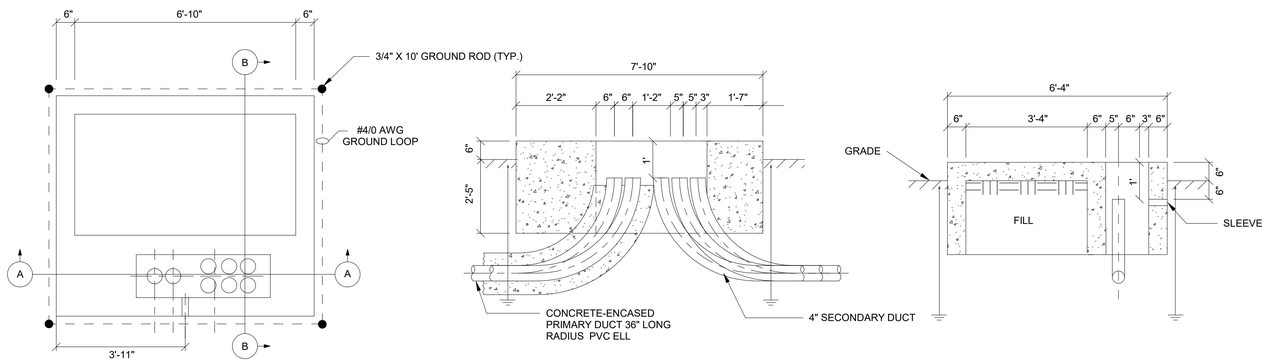

PLAN VIEW

SECTION A

SECTION B

E1
E-502

PAD MOUNT TRANSFORMER CONCRETE PAD

NOT TO SCALE

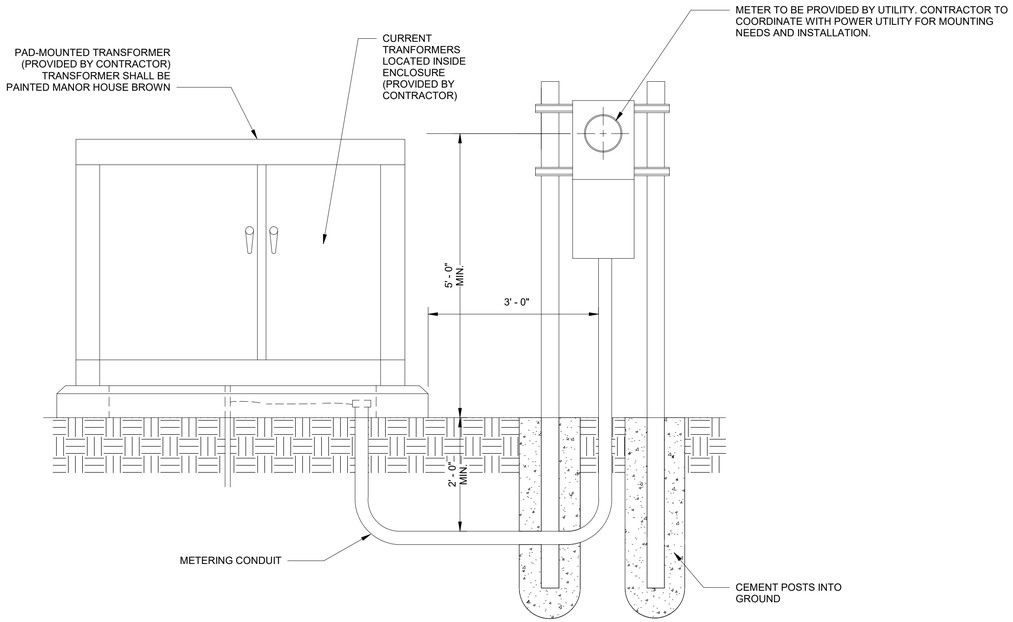

A1
E-502

METERING FOR UNDERGROUND SECONDARY SERVICE IN PAD-MOUNTED TRANSFORMER

3/4" = 1'-0"

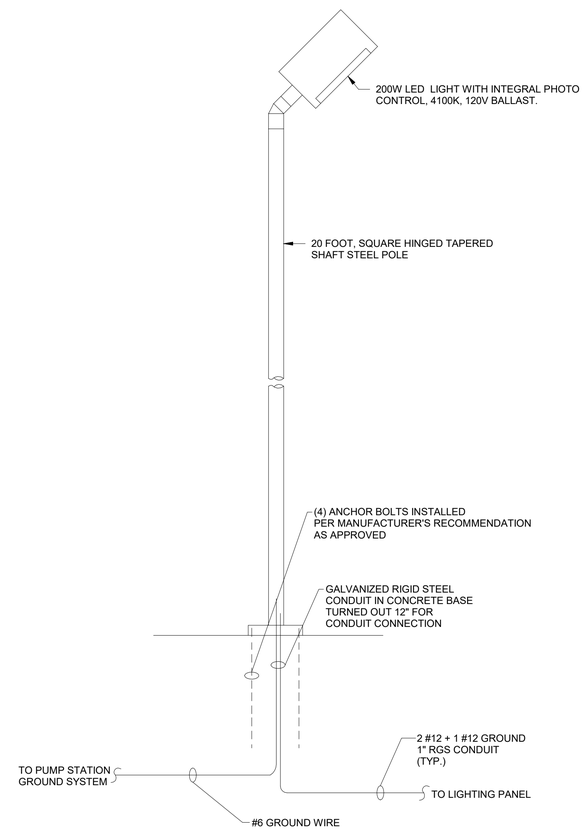

A6
E-502

LIGHT POLE DETAIL

NOT TO SCALE

GENERAL NOTES

1. CONTRACTOR SHALL PROVIDE FITTTINGS AND BUSHINGS APPROPRIATELY SIZED FOR PRIMARY AND SECONDARY CONDUITS.
2. DETAILS FOR INSTALLING THE PADMOUNT TRANSFORMER SHALL BE COORDINATED BETWEEN THE CONTRACTOR, THE GOVERNMENT, AND THE UTILITY.
3. SITE LIGHITNG FIXTURE SHALL BE 200W LED AREA LUMINARIE. FIXTURE SHALL CONSIST OF 60 LEDS, POWERED VIA A 120 VAC CIRCUIT (FROM LIGHTING PANEL INTEGRAL TO MOTOR CONTROL CENTER), HAVE TYPE V DISTRIBUTION, COLOR TEMPERATURE OF 4000K. DRIVE CURRENT SHALL BE 1000 mA.

US Army Corps of Engineers ®

MARK	DESCRIPTION	APPR	DATE

US ARMY CORPS OF ENGINEERS
CHICAGO DISTRICT
231 S LASALLE ST - SUITE 1500
CHICAGO, IL 60604

DESIGNED BY: M. LAWRENCE
DRAWN BY: MNL
CHECKED BY: JEFFREY TIMBAS, P.E.
SUBMITTED BY: FLOYD LEFFLER, PE
SIZE: ANSI 'D'
ISSUE DATE: NOVEMBER 2019
SOLICITATION NO.: TBD
CONTRACT NO.:
DRAWING CODE: XXXXXXXXXXX

UPPER DES PLAINES RIVER
LEVEE 37 - PUMP STATION UPGRADE
MOUNT PROSPECT, ILLINOIS
DETAILS

SHEET ID
E-502

C:\Users\h2eddmnl\Documents\PS LV 37 ELEC_h2eddmnl.rvt
1/28/2020 2:21:44 PM

FINAL DESIGN

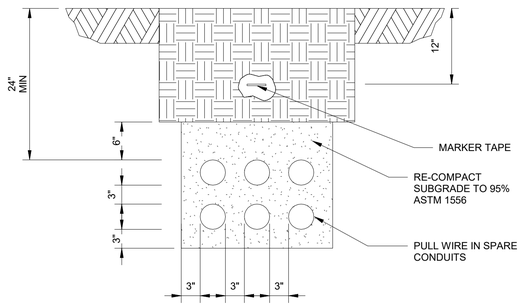

CONCRETE ENCASED SECONDARY POWER DUCT BANK

E1 / E-503

1" = 1'-0"

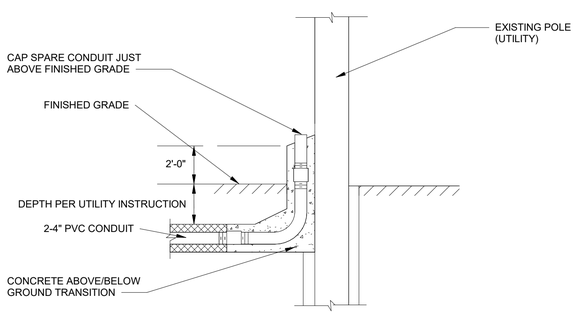

TRANSFORMER PRIMARY DUCT BANK TRANSITION TO UTILITY POLE

A1 / E-503

NOT TO SCALE

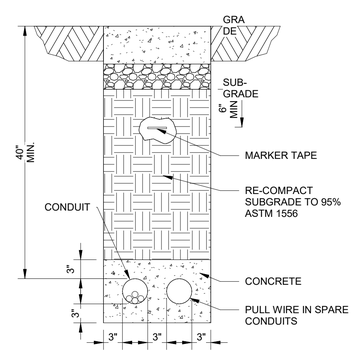

CONCRETE ENCASED PRIMARY POWER DUCT BANK

A5 / E-503

1" = 1'-0"

GENERAL NOTES

1. COORDINATE FINAL DUCT BANK REQUIREMENTS WITH ELECTRICAL UTILITY. FOR FURTHER SITE GUIDANCE, SEE SHEET ES101.

US Army Corps of Engineers ®

MARK	DESCRIPTION	APPR	DATE

DESIGNED BY: Designer
DRAWN BY: Author
CHECKED BY: Checker
SUBMITTED BY:
SIZE: ANSI 'D'
ISSUE DATE:
SOLICITATION NO.:
CONTRACT NO.:
DRAWING CODE:

US ARMY CORPS OF ENGINEERS

PROJECT ADDRESS

DETAILS

SHEET ID

E-503

1/28/2020 2:21:52 PM
C:\Users\h2eddmnl\Documents\PS LV 37 ELEC_h2eddmnl.rvt

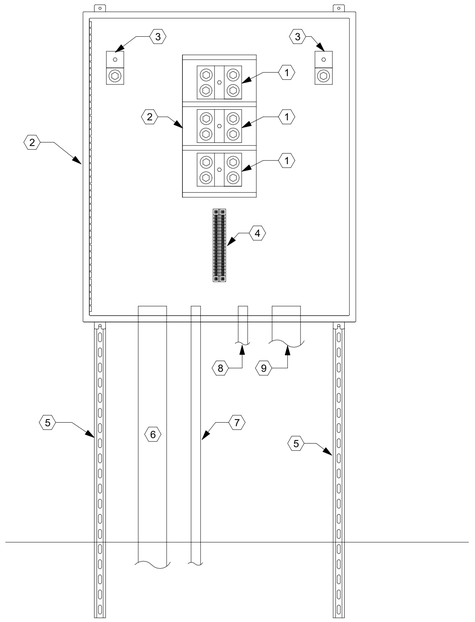

D1
E-504

SUBMERSIBLE PUMP JUNCTION BOX

NOT TO SCALE

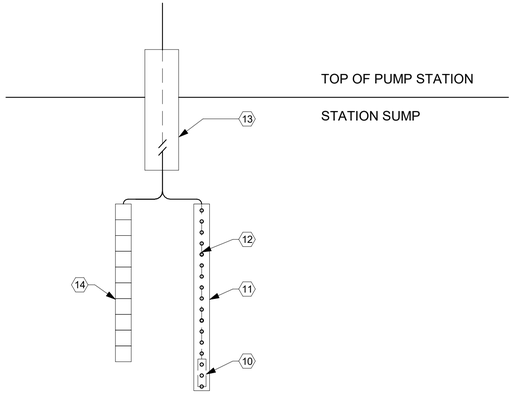

E3
E-504

CONTROL SYSTEM INSTRUMENTATION ELEVATION

NOT TO SCALE

Keynotes	
Key Value	Keynote Text
1	POWER CONDUCTOR LUGS (SIZED PER MOTOR POWER CIRCUIT)
2	LUG INSULATED MOUNTING FRAME
3	GROUNDING LUG
4	TERMINAL STRIP FOR SUBMERSIBLE PUMP MONITORING SIGNALS
5	SLOTTED CHANNEL MOUNT
6	POWER CONDUIT - 3" PVC COATED RGS
7	SIGNALING CONDUIT - 1" PVC COATED RGS
8	FLEXIBLE MULTICONDUCTOR SIGNALING CABLE FROM SUBMERSIBLE PUMP PIPE COVER PLACT ENTRY
9	FLEXIBLE MULTICONDUCTOR POWER CABLE FROM SUBMERSIBLE PUMP PIPE COVER PLACT ENTRY
10	SUBMERSIBLE PRESSURE TRANSDUCER
11	4" PVC STILLING BASIN
12	STILLING BASIN RELIEF HOLE (TYP)
13	FLOAT WELL PENETRATION
14	CONDUCTIVE LEVEL PROBE WITH MINIMUM 10 SENSING SURFACES

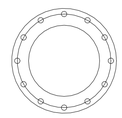

CABLE ENTRY FLANGE

SECTION VIEW

ELEVATION VIEW

CABLE ENTRY COVERPLATE

C3
E-504

CABLE ENTRY FLANGE AND COVER PLATE

NOT TO SCALE

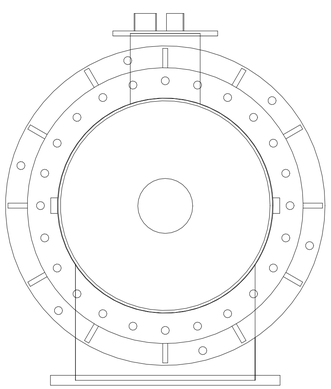

TOP VIEW

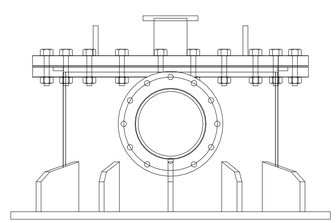

FRONT VIEW

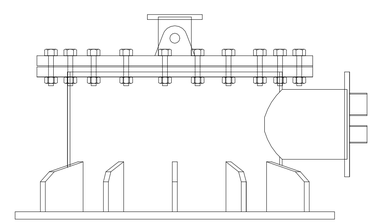

SIDE VIEW

A1
E-504

SUBMERSIBLE PUMP PIPE COVER PLATE AND CABLE ENTRY

NOT TO SCALE

GENERAL NOTES

1. COVER PLATE SHOWN FOR AXIAL-FLOW AND MIXED-FLOW TYPE PUMPS FOR ILLUSTRATION ONLY. FINAL SETUP SHALL BE PER PUMP MANUFACTURER. PROCUREMENT OF SUBMERSIBLE PUMP PIPE COVER PLACT/CABLE ENTRY SIDE ASSEMBLIES SHALL BE THROUGH SUBMERSIBLE PUMP MANUFACTURER.
2. TOP OF SUBMERSIBLE PUMP JUNCTION BOX SHALL BE MOUNTED 5' ABOVE TOP OF STATION. SLOTTED CHANNEL MOUNT SHALL BE CAST DIRECTLY INTO CONCRETE.
3. CONDUCTIVE LEVEL PROBE AND SUBMERSIBLE PRESSURE TRANSDUCER SHALL BE MOUNTED TO WALL OF WELL. A STILLING BASIN CONSISTING OF A 4" PVC CONDUIT WITH 1" HOLES ON BOTH SIDES, SPACED EVERY 6" SHALL BE PROVIDED TO MOUNT SUBMERSIBLE PRESSURE TRANSDUCER WITHIN. STILLING BASIN SHALL BE MOUNTED TO CONCRETE WITH U BRACKETS (MINIMUM OF 5). SUBMERSIBLE PRESSURE TRANSDUCER SHALL BE HUNG WITHIN STILLING BASIN WIA A CABLE SUPPORT GRIP HUNG FROM TOP OF SUMP DIRECTLY ADJACENT TO SUMP CONDUIT PENETRATION.
4. CONDUCTIVE LEVEL PROBE AND SUBMERSIBLE PRESSURE TRUNSDUCER CABLING SHALL BE ROUTED TO THE TOP PORTION OF THE WET SUMP, WHERE BOTH SHALL BE HELD IN PLACE VIA CABLE SUPPORT GRIPS. CONDUIT SEALING BUSHINGS SHALL BE PROVIDED AT PENETRATION INTERIOR TO THE SUMP. THE CABLE SHALL BE ROUTED VIA 1 1/2" RGS CONDUIT RACEWAY INTO THE STATION CONTROL PANEL.
5. CONDUIT SEALING BUSHING SHALL BE OF SEGMENTED DEISGN CONSISTING OF A SEALING RING, THREADED COMPRESSION RINGS, AND TIGHTENING BOLTS TO PROVIDE SEALING FUNCTION FOR PENETRATION WHILE LETTING CABLING PASS THROUGH. UPON EXISTING SUMP, CABLING SHALL ENTER RGS RACEWAY AND BE ROUTED TO PUMP STATION CONTROL PANEL.
6. COVER PLATE SHOWN FOR AXIAL-FLOW AND MIXED-FLOW TYPE PUMPS FOR ILLUSTRATION ONLY. FINAL SETUP SHALL BE PER PUMP MANUFACTURER. PROCUREMENT OF SUBMERSIBLE PUMP PIPE COVER PLACT/CABLE ENTRY SIDE ASSEMBLIES SHALL BE THROUGH SUBMERSIBLE PUMP MANUFACTURER.

US Army Corps of Engineers ®

MARK	DESCRIPTION	APPR	DATE

DESIGNED BY: M. LAWRENCE
DRAWN BY: MNL
CHECKED BY: JEFFREY TIMBAS, P.E.
SUBMITTED BY: KAYE LEFFLER, P.E
SIZE: ANSI 'D'
ISSUE DATE: NOVEMBER 2019
SOLICITATION NO.: TBD
CONTRACT NO.:
DRAWING CODE: XXXXXXXXXXXX

US ARMY CORPS OF ENGINEERS
CHICAGO DISTRICT
231 S. LASALLE ST. SUITE 1500
CHICAGO, IL 60604

UPPER DES PLAINES RIVER
LEVEE 37 - PUMP STATION UPGRADE
MOUNT PROSPECT, ILLINOIS
DETAILS

SHEET ID
E-504

C:\Users\h2eddmnl\Documents\PS LV 37 ELEC_h2eddmnl.rvt
1/28/2020 2:21:55 PM

FINAL DESIGN

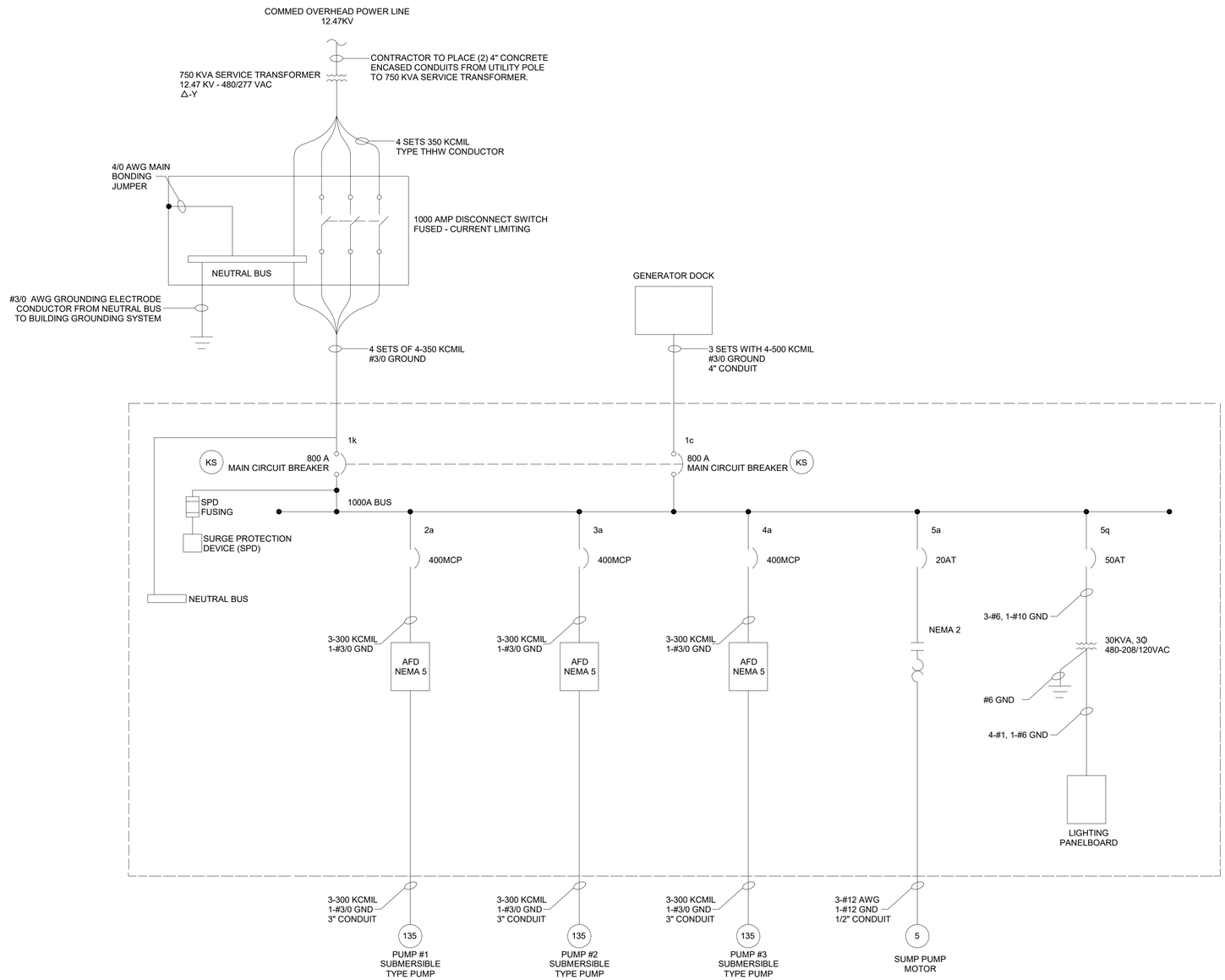

B1
E-601

ONE LINE DIAGRAM

NOT TO SCALE

GENERAL NOTES

1. WHERE THE LENGTH OF ANY 120VAC BRANCH CIRCUIT EXCEEDS 50 FEET, CONDUCTORS SHALL NOT BE SMALLER THAN #10 AWG TO THE FIRST OUTLET.

2. CONTRACTOR SHALL INCREASE WIRE SIZE BY ONE SIZE FOR EACH BRANCH CIRCUIT WIRING THAT EXCEEDS 100' IN LENGTH. CONTRACTOR SHALL INCREASE THE WIRE SIZE FOR BRANCH CIRCUIT WIRING ADDITIONALLY BY ONE SIZE FOR EVERY ADDITIONAL 100' IN LENGTH BEYOND 100'.

3. MOTOR HORSEPOWERS SHOWN ARE NOT FINAL. PUMPING REQUIREMENTS OF STATION MAY CAUSE MOTOR SIZING TO CHANGE DEPENDING ON SUBMERSIBLE PUMP MANUFACTURER'S SIZING CALCULATIONS. ELECTRICAL EQUIPMENT SHALL BE SIZED PER APPROVED SUBMERSIBLE PUMP SIZING.

4. SERVICE DISCONNECT SWITCH SHALL BE FUSED. FUSES SHALL BE CURRENT LIMITING TYPE. SERVICE DISCONNECT SHALL BE RATED 1200A WITH 1000A CURRENT LIMITING FUSES. FUSES SHALL BE CLASS L TYPE.

5. MOTOR CONTROL CENTER CIRCUIT BREAKERS SHALL BE MOLDED CASE TYPE.

6. MAIN CIRCUIT BREAKER AND GENERATOR CIRCUIT BREAKER SHALL BE INTERLOCKED WITH KEY TYPE INTERLOCK. KEY MUST BE PRESENT IN BREAKER BUCKET FOR BREAKER TO BE CLOSED. PROVIDE SINGLE KEY FOR SETUP. INTERLOCK SHALL BE PROVIDED TO PREVENT CONCURRENT CLOSURE OF BOTH MAIN AND GENERATOR CIRCUIT BREAKERS.

7. GENERATOR DOCK SHALL BE PROVIDED FOR EMERGENCY POWER PROVISIONS AND SHALL BE ABLE TO CONNECT PORTABLE GENERATOR TO STATION POWER DISTRIBUTION EQUIPMENT. DOCK SHALL HAVE THE FOLLOWING FEATURES:

   LISTED TO ETL OR UL 1008 STANDARDS

   ENCLOSURE:

   NEMA 3R RAIN TIGHT, 304 GA ALUMINUM ENCLOSURE

   PAD-LOCKABLE FRONT DOOR, HINGED ACCESS PLATE AT BOTTOM FOR ENTRY OF CABLES FROM PORTABLE GENERATOR OR LOAD BANK. NEMA 3R INTEGRITY SHALL BE MAINTAINED WITH ACCESS PLATE OPEN FOR CABLE ENTRY.

   FRONT AND SIDE THROUGH A FRONT ACCESS PANEL SHALL BE ACCESSIBLE FOR MAINTENANCE.

   TOP, SIDE, AND BOTTOM THROUGH A FRONT ACCESS PANEL SHALL BE ACCESSIBLE FOR PERMANENT CABLING.

   FINISHES: PAINT AFTER FABRICATION. POWDER COATED HAMMERTONE GRAY.

   PHASE, NEUTRAL, AND GROUND BUSES:

   MATERIAL: SILVER-PLATED COPPER
   EQUIPMENT GROUND BUS: BONDED TO BOX.
   ISOLATED GROUND BUS: INSULATED FROM BOX.
   GROUND BUS: 50% OF PHASE SIZE.
   NEUTRAL BUS: NEUTRAL BUS RATED 100 PERCENT OF PHASE BUS.
   ROUND EDGES ON BUS.

   TEMPORARY GENERATOR CONNECTORS SHALL BE CAM-STYLE SINGLE POLE MOUNTED ON GLAND PLATE.

   CONNECTORS SHALL BE COLOR CODED ACCORDING TO SYSTEM VOLTAGE
   A PHASE – BLACK OR BROWN
   B PHASE – RED OR ORANGE
   C PHASE – BLUE OR YELLOW
   N NEUTRAL – WHITE
   G GROUND – GREEN

   TEMPORARY CONNECTORS SHALL INCLUDE PROTECTIVE FLIP LIDS TO PREVENT ACCIDENTAL CONTACT.

   PERMANENT CONNECTORS SHALL BE BROAD RANGE SET-SCREW TYPE, LOCATED BEHIND AN ALUMINUM BARRIER.

   SHORT CIRCUIT & WITHSTAND RATING SHALL BE MINIMUM 65,000 AIC UNLESS OTHERWISE INDICATED ON DRAWINGS.

   DOCK SHALL BE RATED 600 VAC, 1000 AMPS.

8. ALL POWER DISTRIBUTION EQUIPMENT SHALL HAVE A MINIMUM AIC RATING OF 65,000. ALL EQUIPMENT SHALL BE FULLY RATED; NO SERIES RATED EQUIPMENT WILL BE ACCEPTED.

9. SURGE PROTECTIVE DEVICE (SPD) FOR MOTOR CONTROL CENTER SHALL BE PER MANUFACTURER'S RECOMMENDATION. SEE SECTION 2.2.10 IN SPECIFICATION 26 05 00.00 40 – COMMON WORK RESULTS FOR ELECTRICAL FOR MORE INFORMATION REGARDING SURGE PROTECTION.

10. SUMP PUMP OVERLOAD SHALL BE SIZED PER RECOMMENDATION OF MOTOR/PUMP MANUFACTURER.

11. SEE SHEET E-602 FOR PANEL SCHEDULE OF LIGHTING PANEL INTEGRAL TO MOTOR CONTROL CENTER.

12. POWER CABLES FOR SUBMERSIBLE PUMPS SHALL BE SUBMERSIBLE TYPE AND BE ONE CONTINUOUS RUN. NO SPLICES ARE ALLOWED.

US Army Corps of Engineers ®

MARK	DESCRIPTION	APPR	DATE

DESIGNED BY: M. LAWRENCE
DRAWN BY: MNL
CHECKED BY: JEFFREY TIMBAS, P.E.
SUBMITTED BY: KAYE LEFFLER, PE
SIZE: ANSI 'D'
ISSUE DATE: NOVEMBER 2019
SOLICITATION NO.: TBD
CONTRACT NO.:
DRAWING CODE: XXXXXXXXXXX

US ARMY CORPS OF ENGINEERS
CHICAGO DISTRICT
231 S. LASALLE ST. SUITE 1500
CHICAGO, IL 60604

UPPER DES PLAINES RIVER
LEVEE 37 - PUMP STATION UPGRADE
MOUNT PROSPECT, ILLINOIS
POWER ONE LINE DIAGRAM

SHEET ID
E-601

C:\Users\h2eddmnl\Documents\PS LV 37 ELEC_h2eddmnl.rvt
1/28/2020 2:21:59 PM

FINAL DESIGN

GENERAL NOTES

1. 30A CIRCUIT SHOWN FOR PUMP CONTROL PANEL. SYSTEMS INTEGRATOR SHALL DETERMINE FINAL SIZE OF CIRCUIT AND ADJUST PANEL CIRCUITING ACCORDINGLY.

Panelboard LPMCC

Location: Integral to MCC					Voltage	Phase				Wire	Panel Size	Main Breaker	Poles	Minimum Interrupting Ratings			
Mounting: Recessed					120 / 208	3				4	60 A	50 A	12	Main: 10,000 Branch: 10,000			
Pole No.	Sets	AWG (#) KCM	Brkr Trip	Brkr Poles	Load Served	KVA	A	B	C	KVA	Load Served		Brkr Poles	Brkr Trip	AWG (#) KCM	Sets	Pole No.
1	1	# 12	15	1	Station Lighting	0.25	0.25			0.00	Spare		1	15	# 12	1	2
3	1	# 12	15	1	GFCI Type Receptacles	0.54		0.54		0.00	Spare		1	15	# 12	1	4
5	1	# 10	30	1	Control Panel	3.60			3.60	0.00	Spare		1	15	# 12	1	6
7	1	# 12			Space	0.00	0.00			0.00	Space				# 12	1	8
9	1	# 12			Space	0.00		0.00		0.00	Space				# 12	1	10
11	1	# 12			Space	0.00			0.00	0.00	Space				# 12	1	12
Total Design Load Amps:				12			0.3	0.5	3.6		Total Design Load VA:		4390.00				

A1 / E-602

PANEL SCHEDULE

12" = 1'-0"

US Army Corps of Engineers ®

MARK	DESCRIPTION	APPR	DATE

DESIGNED BY: M. LAWRENCE
DRAWN BY: MNL
CHECKED BY: JEFFREY TIMBAS, P.E.
SUBMITTED BY: DAVE LEFFLER, PE
SIZE: ANSI 'D'
ISSUE DATE: NOVEMBER 2019
SOLICITATION NO.: TBD
CONTRACT NO.:
DRAWING CODE: XXXXXXXXXXX

US ARMY CORPS OF ENGINEERS
CHICAGO DISTRICT
231 S. LASALLE ST. SUITE 1500
CHICAGO, IL 60604

UPPER DES PLAINES RIVER
LEVEE 37 - PUMP STATION UPGRADE
MOUNT PROSPECT, ILLINOIS
PANEL SCHEDULE

SHEET ID
E-602

C:\Users\h2eddmnl\Documents\PS LV 37 ELEC_h2eddmnl.rvt
1/28/2020 2:23:55 PM

FINAL DESIGN

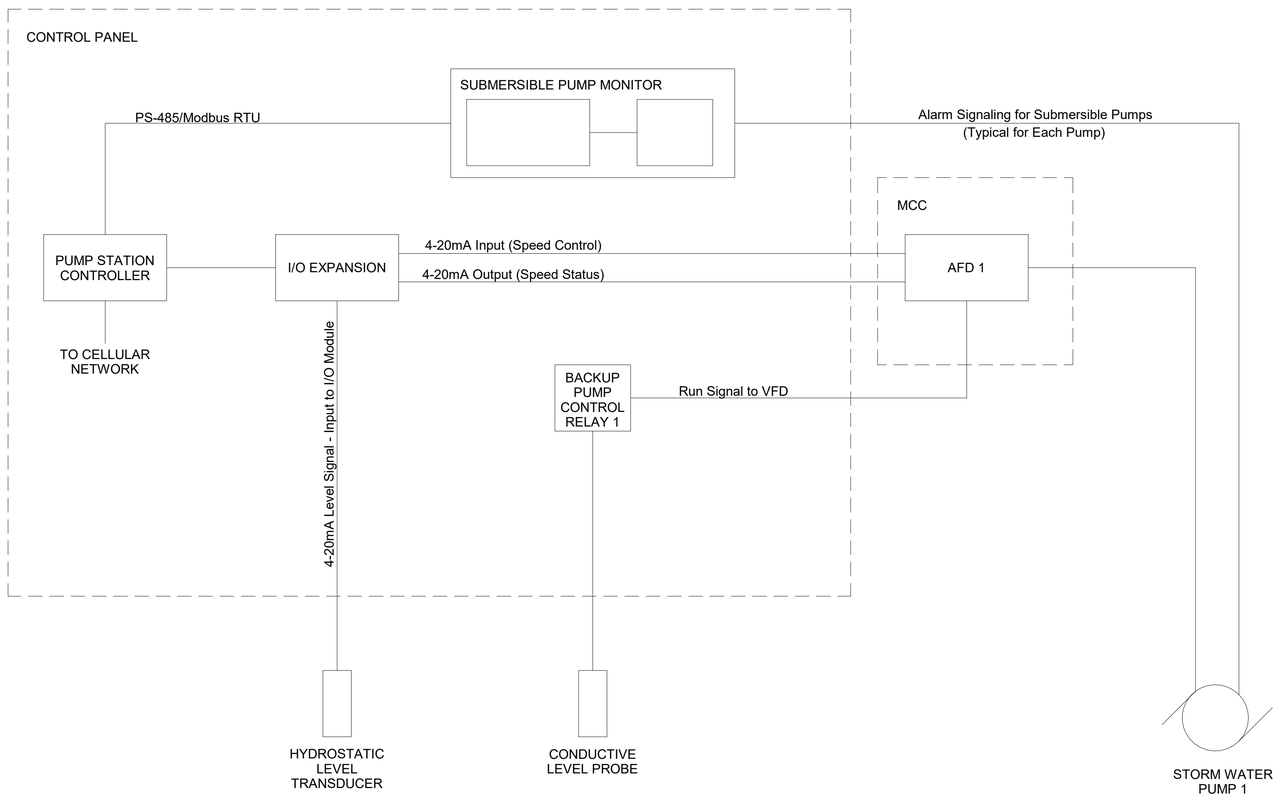

A1
E-603

PUMP CONTROL DIAGRAM

NOT TO SCALE

GENERAL NOTES

1. DIAGRAM INTENDED TO SHOW SYSTEM ARCHITECTURE. NOT ALL CONNECTIONS SHOWN.

2. NOT ALL EQUIPMENT SHOWN. PUMP MOTOR, ADJUSTABLE FREQUENCE DRIVE, ALARM SIGNALING, AND BACKUP PUMP CONTROL RELAY TYPICAL FOR ALL STORMWATER PUMP. PUMP MOTOR AND ALARM SIGNALING STATUS TYPICAL FOR SUMP PUMP.

3. SEQUENCE OF OPERATIONS:

   STATION SHALL BE CONTROLLED AUTOMATICALLY VIA A PUMP CONTROL SYSTEM. SYSTEM SHALL CONSIST OF MAIN CONTROLLER, SUBMERSIBLE LEVEL TRANSDUCERS FOR SUMP ELEVATION, SUBMERSIBLE PUMP MONITORING SYSTEM (FOR PUMP BEARING TEMPERATURE, SEAL STATUS, ETC.), AND A BACKUP PUMP ACTIVATION SYSTEM (CONSISTING OF A RELAY AND CONDUCTIVE LEVEL PROBE).

   THE STATION SHALL HAVE A CELLULAR DATA SIGNAL PRESENT FOR TWO WAY COMMUNICATIONS (STATUS AND CONTROL) TO A VIRUTAL HUMAN MACHINE INTERFACE WHICH SHALL BE INTERNET ACCESSABLE.

   PUMP CONTROL SYSTEM SHALL MONITOR SUMP LEVEL, ACTIVATE AT THE DESIGNATED LEVELS PER PUMP, PROVIDE THE HMI WITH THE DESIGNATED ALARM SIGNALS, REAL TIME SUMP ELEVATIONS, AND STATUS OF THE PUMPS (ACTIVATION/SPEED).

   FLOOD PUMPS SHALL ROTATE WITH RESPECT TO ACTIVATION DURING FLOODING EVENTS TO KEEP ELAPSED RUN TIMES SIMILAR. IN ADDITION, THE CONTROL SYSTEM SHALL PROVIDE SPEED CONTROL FUNCTIONALITY TO THE PUMP MOTORS VIA ADJUSTABLE FREQUENCY DRIVES.

   THE SYSTEMS INTEGRATOR SHALL MEET WITH THE SPONSOR FOR FINAL OPERABILITY DIRECTION REGARDING SPEED CONTROL, SYSTEM NOTIFICATIONS, AND INTEFRACE (STATUS AND CONTROL) PRIOR TO FINAL PROGRAMMING OF SYSTEM.

   ACTIVATION AND CUT OFF LEVELS ARE SHOWN ON SHEET M-601. CONTRACTOR SHALL COORDINATE FINAL START/STOP ELEVATIONS IN FIELD WITH PUMP MANUFACTURER AND PROJECT FIELD PERSONNEL UPON APPROVAL OF SUBMERSIBLE PUMP SUBMITTAL. ELEVATIONS ACTIVATION LEVELS SHALL INCLUDE START STOP FOR EACH PUMP, ALONG WITH A STATION HIGH LEVEL ALARM.

4. PROVIDE CURRENT SENSING RELAY FOR PUMP ACTIVATION VERIFICATION SIGNALING. CURRENT SENSORS SHALL OPERATE BY SENSING CURRENT FLOW IN OPERATING EQUIPMENT. RELAYS SHALL TRIP WHEN CURRENT IS FLOWING THROUGH POWER CONDUCTOR PASSING THROUGH THE RELAY'S CORE. RELAY SHALL HAVE A FIXED OR ADJUSTABLE SET POINT WITH A RANGE OF 1-150 AMPS. CONTACTS SHALL BE NORMALLY CLOSED, WITH A RESPONSE TIME OF 120 MILLISECONDS. THE CORE SHALL BE A SOLID-CORE TYPE. RELAY SHALL BE UL AND CE APPROVED. CURRENT SENSING RELAYS SHALL PROVIDE POSITIVE INDICATION OF PUMP MOTOR ACTIVATION. IN THE EVENT THAT THE MOTOR ACTIVATION SIGNAL IS PRESENT, AND THE CURRENT SENSING RELAY HAS NOT OUTPUT A SIGNAL, AN ALARM SHALL BE RAISED TO INDICATE FAILURE TO ACTIVATE.

5. ALL REQUIRED HARDWARE AND PANEL WIRING NOT SHOWN FOR SIMPLIFICATION. CONTRACTOR SHALL BE RESPONSIBLE FOR PROVIDING ALL EQUIPMENT, SOFTWARE, AND PROGRAMMING REQUIRED TO PROVIDE A COMPLETELY FUNCTIONAL AND PROPERLY OPERATING SYSTEM. SEE SPECIFICATION 40 95 00 - PUMP STATION CONTROL SYSTEM, FOR CONTROL SYSTEM EQUIPMENT SPECIFICATIONS.

6. PROVIDE CONTROL PANEL WITH SURGE PROTECTIVE DEVICE (SPD). SEE SECTION 3.3.1.1 OF SPECIFICATION 40 95 00 – PUMP STATION CONTROL SYSTEM FOR MORE INFORMATION ON SURGE PROTECTION. SPD SHALL BE INSTALLED PER MANUFACTURER'S RECOMMENDATIONS.

7. CONTROL PANEL WIRING SHALL MAINTAIN PROPER CLEARANCES BETWEEN CLASS 2 AND CLASS 3 CIRCUITS.

8. NORMAL CONTROL FUNCTIONALITY SHALL BE THROUGH THE CONTROL PANEL, WITH STATION SUMP WATER ELEVATION SHOWN ON CONTROL PANEL HMI. BACKUP RELAY SYSTEM SHALL FUNCTION AS CONTORL IF PUMP CONTROLLER FAILS. IN ADDITION TO THE BACKUP RELAY SYSTEM, A MANUAL ACTIVATION OF EACH PUMP SHALL BE PRESENT VIA A HAND-OFF-AUTO (HOA) SWITCH (TO SWITCH FROM THE PUMP CONTROLLER BASED CONTROLS TO MANUAL CONTROLS) START AND STOP PUSHBUTTONS, AND RUN AND STOP INDICATION LIGHTS. IF HOA SWITCH IS PLACED IN "AUTO", PUMPS SHALL BE CONTROLLED VIA PUMP CONTROLLER OR BACKUP RELAY SYSTEM. IF HOA SWITCH IS PLACED IN "HAND", PUMPS SHALL BE MANUALLY CONTROLLED VIA THE START/STOP PUSHBUTTONS. MANUAL OPERATION SHALL ALSO CONSIST OF A JOG DIAL OR INTERFACE WITH VFD FOR MANUAL SPEED CONTROL OPTIONS. THE SUMP LOW LEVEL CUTOUT FLOAT SWITCH SHALL PREVENT THE PUMPS FROM RUNNING DRY BY CUTTING POWER WHEN LOW LEVEL IS REACHED.

US Army Corps of Engineers ®

MARK	DESCRIPTION	APPR	DATE

DESIGNED BY: M. LAWRENCE
DRAWN BY: MNL
CHECKED BY: JEFFREY TIMBAS, P.E.
SUBMITTED BY: KAYLEE LEFFLER, P.E.
SIZE: ANSI 'D'
ISSUE DATE: NOVEMBER 2019
SOLICITATION NO.: TBD
CONTRACT NO.:
DRAWING CODE: XXXXXXXXXXX

US ARMY CORPS OF ENGINEERS
CHICAGO DISTRICT
231 S. LASALLE ST. SUITE 1500
CHICAGO, IL 60604

UPPER DES PLAINES RIVER
LEVEE 37 - PUMP STATION UPGRADE
MOUNT PROSPECT, ILLINOIS
PUMP CONTROL DIAGRAM

SHEET ID
E-603

C:\Users\h2eddmnl\Documents\PS LV 37 ELEC_h2eddmnl.rvt
1/28/2020 2:23:58 PM

FINAL DESIGN

PLAN NORTH

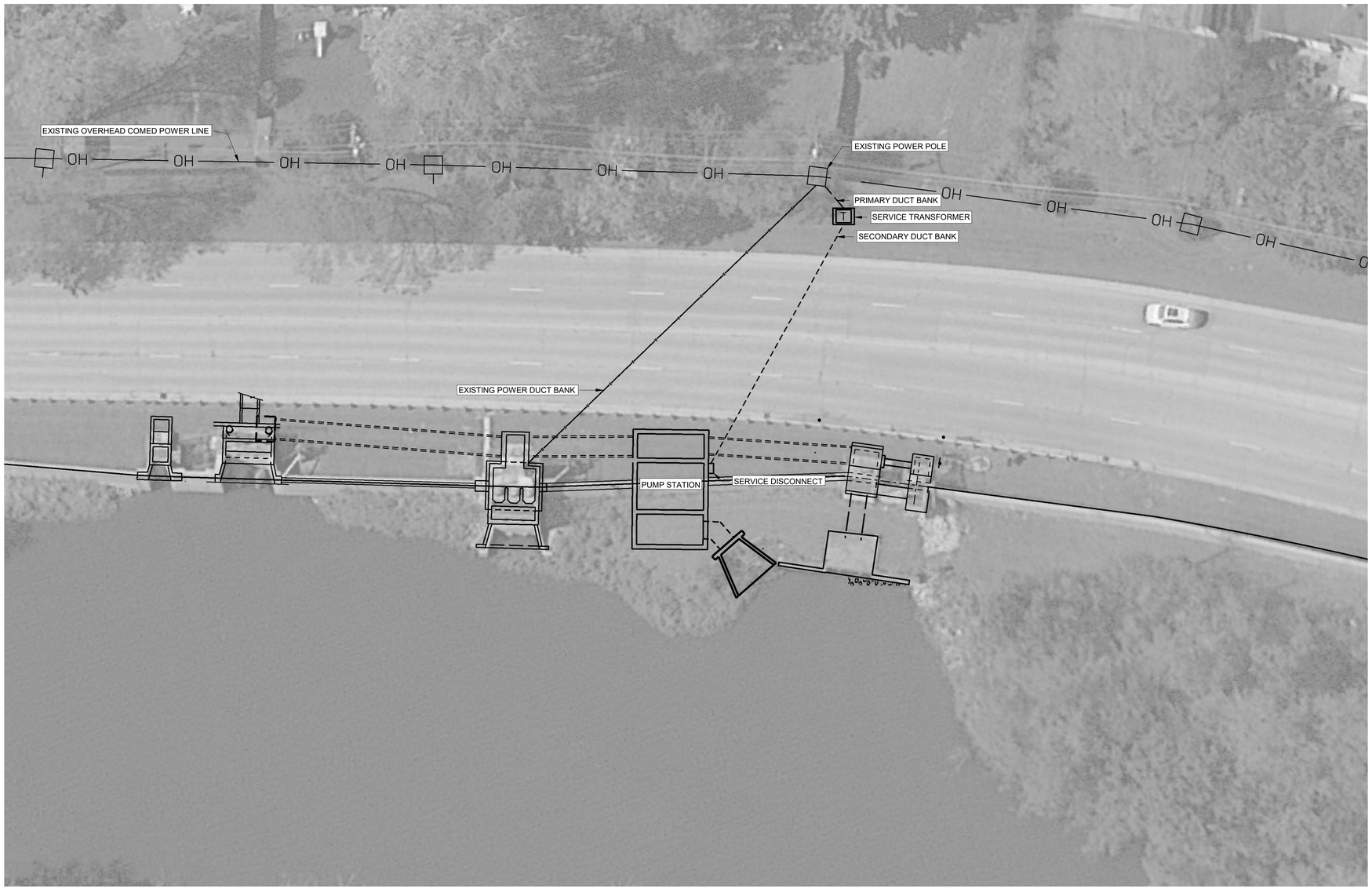

A1
ES-101

SITE PLAN

1" = 20'-0"

GENERAL NOTES

1. UTILTY TRANSFORMER AND RACEWAY FEED NOT SHOWN IN FINAL LOCATION/CONFIGURATION, AND ARE TO BE UTILIZED FOR BIDDING PURPOSES ONLY. CONTRACTOR SHALL COORDINATE WITH UTILTY ON BEST LOCATION AND ROUTING PATH FROM EXISTING UTILITY LINE TO STATION/MOTOR CONTROL CENTER LOCATION.
2. CONTRACTOR SHALL COORDINATE PROCUREMENT OF SERVICE WITH COMMONWEALTH EDISON COMPANY (UTILITY) AND BE RESPONSIBLE FOR ALL COSTS INCURRED. UTILITY POINT OF CONTACT IS:

   CALANDRA F. DAVIS
   847-870-2050
   CALANDRA.DAVIS@COMED.COM
3. CONTRACTOR SHALL PROVIDE PRIMARY DUCT BANK FROM BASE OF EXISTING UTILITY POLE DIRECTLY ADJACENT TO STATION TO TRANSFORMER MOUNTING PAD . PRIMARY AND SECONDARY DUCT BANKS SHALL BE IN ACCORDANCE WITH DETAILS A1 AND E5 ON SHEET E-503. RANSITION FROM EXISITNG UTILITY POLE TO PRIMARY DUCT BANK SHALL BE N ACCORDANCE WITH DETAIL A5 ON SHEET E-503.
4. SERVICE GROUNDING SHALL BE IN ACCORDANCE WITH SECTION 3.13 OF SPECIFICATION 33 71 02 - UNDERGROUND ELECTRICAL DISTRIBUTION.
5. SEE DETAILS FOR THE PADMOUNT TRANSFORMER CONCRETE PAD, TRANSFORMER PRIMARY DUCT BANK TRANSITION TO UTILITY POLE, AND CONCRETE ENCASED LOW VOLTAGE POWER DUCT BANK SHEET E-502.
6. PRIOR TO ALL DIGGING/EXCAVATION WORK, CONTRACTOR SHALL DETERMINE ALL LOCATIONS OF EXISTING UTILITIES. ROUTING OF ELECTRICAL WORK MAY CHANGE DUE TO LOCATIONS AND UTILITY INSTRUCTION DURING COORDINATION.

US Army Corps of Engineers ®

MARK	DESCRIPTION	APPR	DATE

DESIGNED BY: M. LAWRENCE
DRAWN BY: MNL
CHECKED BY: JEFFREY TIMBAS, P.E.
SUBMITTED BY: KEVIN LEFFLER, PE
SIZE: ANSI "D"
ISSUE DATE: NOVEMBER 2019
SOLICITATION NO.: TBD
CONTRACT NO.:
DRAWING CODE: XXXXXXXXXXX

US ARMY CORPS OF ENGINEERS
CHICAGO DISTRICT
231 S. LASALLE ST., SUITE 1500
CHICAGO, IL 60604

UPPER DES PLAINES RIVER
LEVEE 97 - PUMP STATION UPGRADE
MOUNT PROSPECT, ILLINOIS
SITE PLAN

SHEET ID
ES-101

C:\Users\h2eddmnl\Documents\PS LV 37 ELEC_h2eddmnl.rvt
1/28/2020 2:24:04 PM

FINAL DESIGN

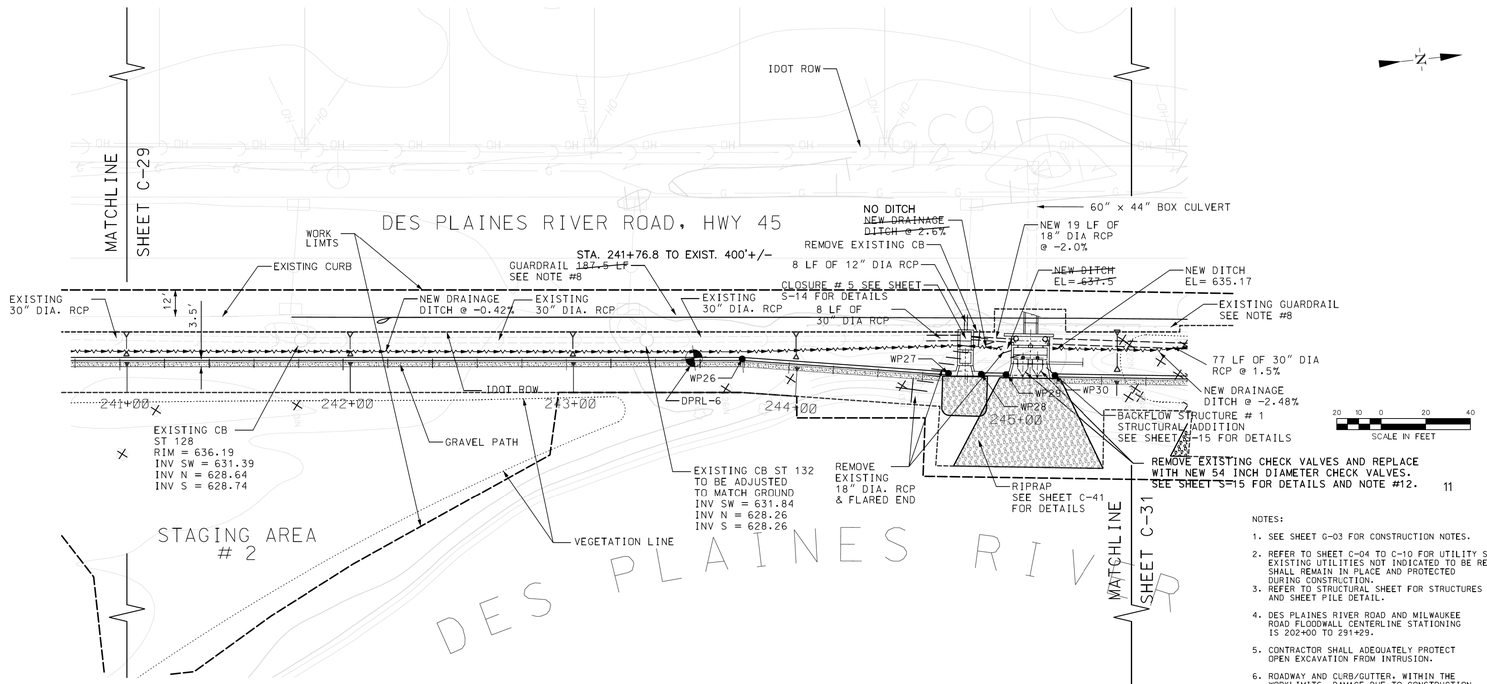

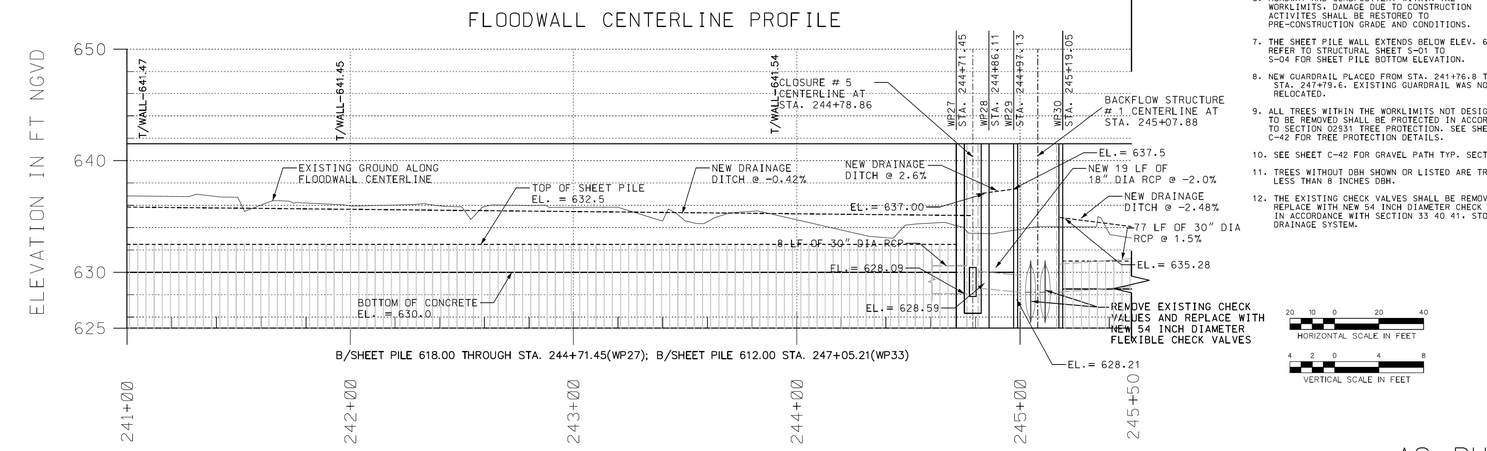

NOTES:

1. SEE SHEET G-03 FOR CONSTRUCTION NOTES.
2. REFER TO SHEET C-04 TO C-10 FOR UTILITY SURVEY. EXISTING UTILITIES NOT INDICATED TO BE REMOVED SHALL REMAIN IN PLACE AND PROTECTED DURING CONSTRUCTION.
3. REFER TO STRUCTURAL SHEET FOR STRUCTURES AND SHEET PILE DETAIL.
4. DES PLAINES RIVER ROAD AND MILWAUKEE ROAD FLOODWALL CENTERLINE STATIONING IS 202+00 TO 291+29.
5. CONTRACTOR SHALL ADEQUATELY PROTECT OPEN EXCAVATION FROM INTRUSION.
6. ROADWAY AND CURB/GUTTER. WITHIN THE WORKLIMITS. DAMAGE DUE TO CONSTRUCTION ACTIVITES SHALL BE RESTORED TO PRE-CONSTRUCTION GRADE AND CONDITIONS.
7. THE SHEET PILE WALL EXTENDS BELOW ELEV. 625. REFER TO STRUCTURAL SHEET S-01 TO S-04 FOR SHEET PILE BOTTOM ELEVATION.
8. NEW GUARDRAIL PLACED FROM STA. 241+76.8 TO STA. 247+79.6. EXISTING GUARDRAIL WAS NOT RELOCATED.
9. ALL TREES WITHIN THE WORKLIMITS NOT DESIGNATED TO BE REMOVED SHALL BE PROTECTED IN ACCORDANCE TO SECTION 02931 TREE PROTECTION. SEE SHEET C-42 FOR TREE PROTECTION DETAILS.
10. SEE SHEET C-42 FOR GRAVEL PATH TYP. SECTION.
11. TREES WITHOUT DBH SHOWN OR LISTED ARE TREES LESS THAN 8 INCHES DBH.
12. THE EXISTING CHECK VALVES SHALL BE REMOVED AND REPLACE WITH NEW 54 INCH DIAMETER CHECK VALVES IN ACCORDANCE WITH SECTION 33 40 41. STORM DRAINAGE SYSTEM.

AS-BUILT

US Army Corps of Engineers Chicago District

MARK	DESCRIPTION	DATE	APPROVED
ASBUILT		09/05	

MARK	AMENDMENT DESCRIPTION	DATE APPROVED	NUMBER	DESCRIPTION	DATE APPROVED

DESIGNED BY: GA	DATE: 30 SEPT 2008	
DRAWN BY: GA	SCALE: AS SHOWN	
CHECKED BY: JT	SOLICITATION NUMBER: W912P6-08-C-0024	
SUBMITTED BY: JOHN GROBOSKI, P.E.		DATE

U.S. ARMY ENGINEER DISTRICT
CORPS OF ENGINEERS
CHICAGO, ILLINOIS

DES PLAINES RIVER, ILLINOIS
LOCAL FLOOD PROTECTION
FLOODWALL 37
RIVER RD/MILWAUKEE AVE.
SITE PLAN AND PROFILE
STA. 241+00 TO 245+50

SHEET REFERENCE NUMBER:
C-30
SHEET 37 OF 136

PLOT DATE: 9/17/2013
FILENAME: C:\PROJECTS\CEC2-14MAS_11.dgn

US Army Corps of Engineers®

MARK	DESCRIPTION	DATE

DESIGNED BY: GA	ISSUE DATE: 12/2018
DRAWN BY: KPC	SOLICITATION NO.: W912P6-19-B-00XX
CHECKED BY: FL	CONTRACT NO.: W912P6-19-C-00XX
SUBMITTED BY: FAYE LEFTWICH	PROJECT ID:
ANSI D	PROJECT ID: 113244 R-001.dgn

U.S. ARMY CORPS OF ENGINEERS
CHICAGO DISTRICT
231 S. LASALLE ST. SUITE 1500
CHICAGO, ILLINOIS 60604

UPPER DES PLAINES RIVER
LEVEE 37 - PUMP STATION UPGRADE
MOUNT PROSPECT, ILLINOIS

SITE PLAN AND PROFILE
STA. 241+00 TO 245+50

SHEET ID
R-001

REFERENCE DRAWING

...\Levee 37_Pump Station Upgrade Project-113244\40 - Geospatial Data\Drawings\CAD_BIM_Sheets\113244_R-001.dgn
11:38:48 AM 12/27/2019 PD: AEC_pdf.pltcfg DS: AEC_Screen.dscript

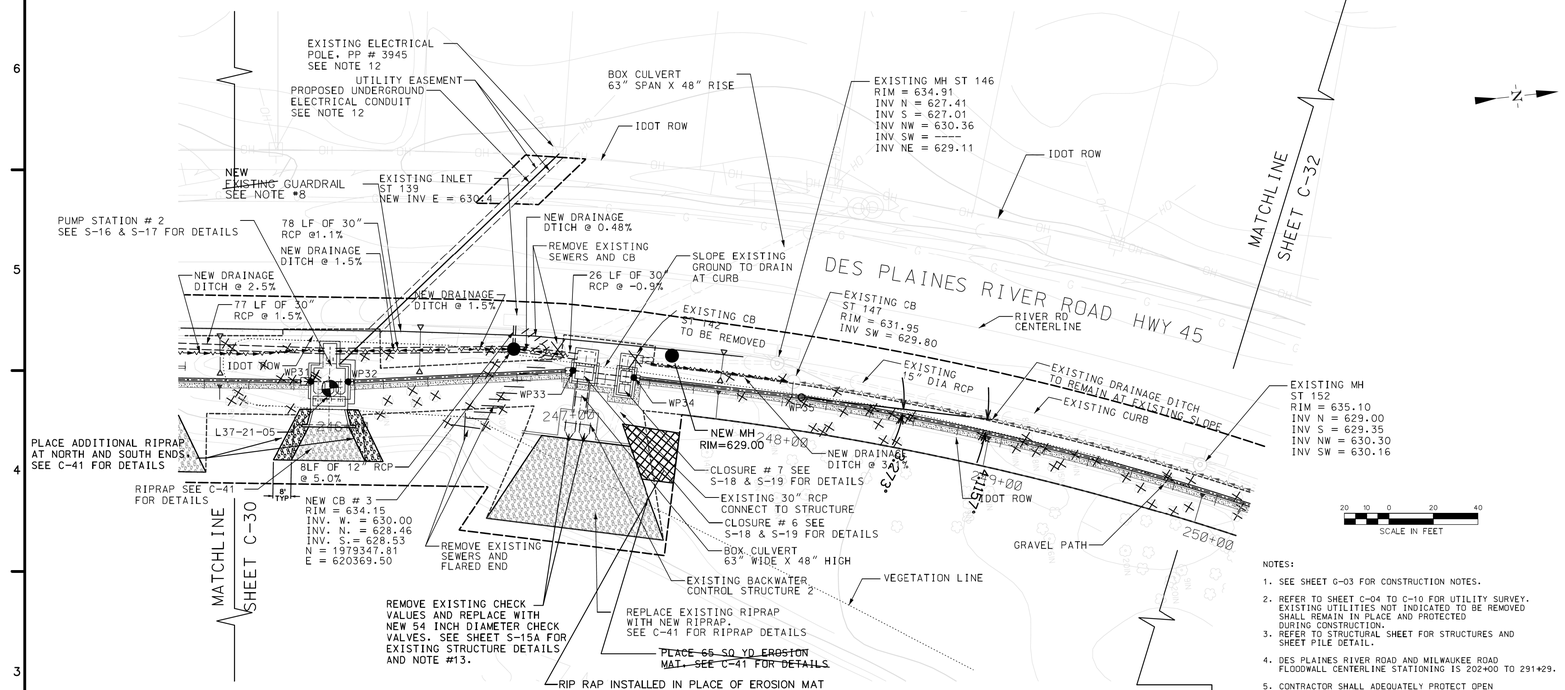

FLOODWALL CENTERLINE PROFILE

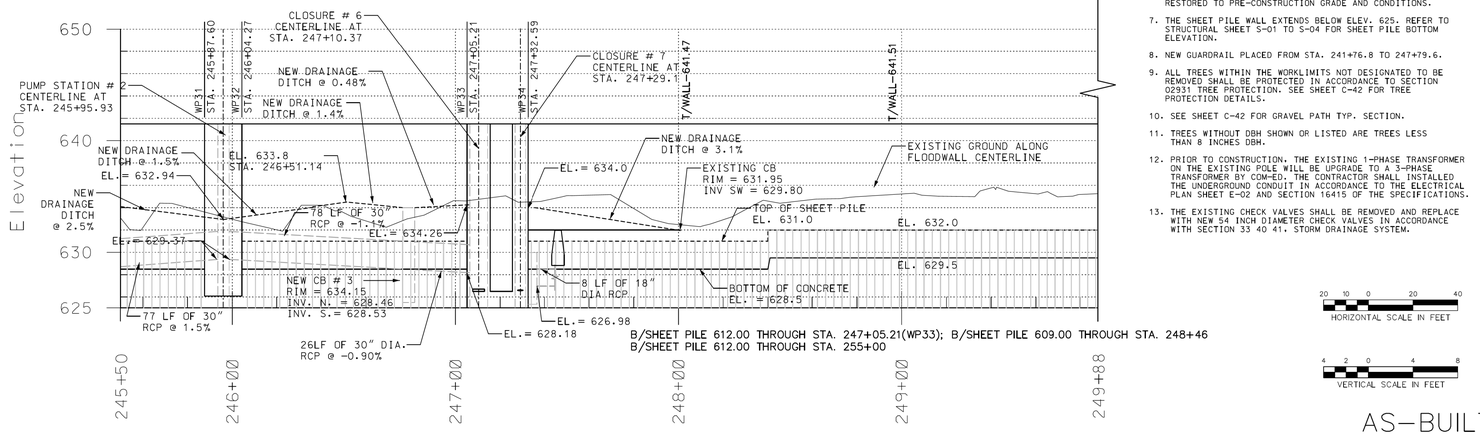

AS-BUILT

NOTES:

1. SEE SHEET G-03 FOR CONSTRUCTION NOTES.
2. REFER TO SHEET C-04 TO C-10 FOR UTILITY SURVEY. EXISTING UTILITIES NOT INDICATED TO BE REMOVED SHALL REMAIN IN PLACE AND PROTECTED DURING CONSTRUCTION.
3. REFER TO STRUCTURAL SHEET FOR STRUCTURES AND SHEET PILE DETAIL.
4. DES PLAINES RIVER ROAD AND MILWAUKEE ROAD FLOODWALL CENTERLINE STATIONING IS 202+00 TO 291+29.
5. CONTRACTOR SHALL ADEQUATELY PROTECT OPEN EXCAVATION FROM INTRUSION.
6. ROADWAY AND CURB/GUTTER, WITHIN THE WORKLIMITS, DAMAGE DUE TO CONSTRUCTION ACTIVITES SHALL BE RESTORED TO PRE-CONSTRUCTION GRADE AND CONDITIONS.
7. THE SHEET PILE WALL EXTENDS BELOW ELEV. 625. REFER TO STRUCTURAL SHEET S-01 TO S-04 FOR SHEET PILE BOTTOM ELEVATION.
8. NEW GUARDRAIL PLACED FROM STA. 241+76.8 TO 247+79.6.
9. ALL TREES WITHIN THE WORKLIMITS NOT DESIGNATED TO BE REMOVED SHALL BE PROTECTED IN ACCORDANCE TO SECTION 02931 TREE PROTECTION. SEE SHEET C-42 FOR TREE PROTECTION DETAILS.
10. SEE SHEET C-42 FOR GRAVEL PATH TYP. SECTION.
11. TREES WITHOUT DBH SHOWN OR LISTED ARE TREES LESS THAN 8 INCHES DBH.
12. PRIOR TO CONSTRUCTION, THE EXISTING 1-PHASE TRANSFORMER ON THE EXISTING POLE WILL BE UPGRADE TO A 3-PHASE TRANSFORMER BY COM-ED. THE CONTRACTOR SHALL INSTALLED THE UNDERGROUND CONDUIT IN ACCORDANCE TO THE ELECTRICAL PLAN SHEET E-02 AND SECTION 16415 OF THE SPECIFICATIONS.
13. THE EXISTING CHECK VALVES SHALL BE REMOVED AND REPLACE WITH NEW 54 INCH DIAMETER CHECK VALVES IN ACCORDANCE WITH SECTION 33 40 41, STORM DRAINAGE SYSTEM.

US Army Corps of Engineers Chicago District

MARK	DESCRIPTION	DATE	APPROVED	MARK	DESCRIPTION	DATE	APPROVED
				ASBUILT	INFO		

U.S. ARMY ENGINEER DISTRICT CORPS OF ENGINEERS CHICAGO, ILLINOIS

DESIGNED BY: GA — DATE: 30 SEPT 2008
DRAWN BY: GA — SCALE: AS SHOWN
CHECKED BY: JT — SOLICITATION NUMBER: W912P6-08-C-0024
SUBMITTED BY: JOHN GROBOSKI, P.E. — DATE:

DES PLANES RIVER, ILLINOIS
LOCAL FLOOD PROTECTION
FLOODWALL 37
RIVER RD/MILWAUKEE AVE.
SITE PLAN AND PROFILE
STA. 245+50 TO 249+88

SHEET REFERENCE NUMBER: C-31
SHEET 38 OF 136

PLOT DATE: 8/17/2015
FILENAME: "Levee37-PS0037-Sec04.dgn"

US Army Corps of Engineers®

MARK	DESCRIPTION	DATE

ISSUE DATE: 12/2018
SOLICITATION NO.: W912P6-19-B-00XX
CONTRACT NO.: W912P6-19-C-00XX
PROJECT ID: PROJECT ID
FILE NAME: 113244 R-002.dgn

U.S. ARMY CORPS OF ENGINEERS
CHICAGO DISTRICT
231 S. LASALLE ST. SUITE 1500
CHICAGO, ILLINOIS 60604

UPPER DES PLAINES RIVER
LEVEE 37 - PUMP STATION UPGRADE
MOUNT PROSPECT, ILLINOIS

SITE PLAN AND PROFILE
STA. 245+50 TO 249+88

SHEET ID
R-002

REFERENCE DRAWING

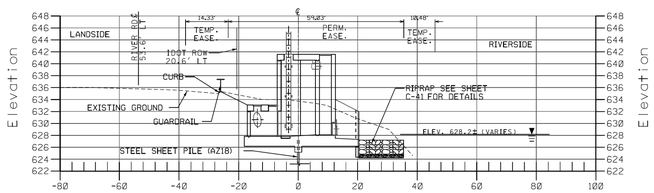

PUMP STATION #2
STA.245+96

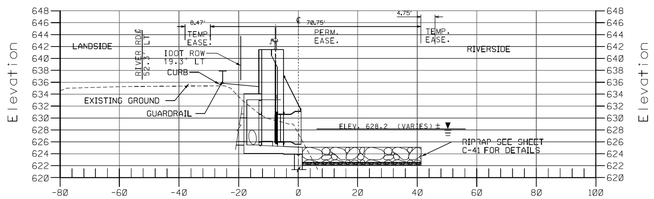

BACKFLOW STRUCTURE #1
STA.245+08

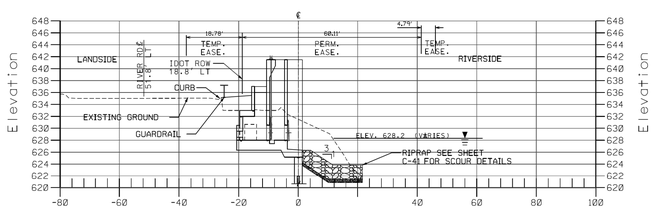

CLOSURE #5
STA.244+79

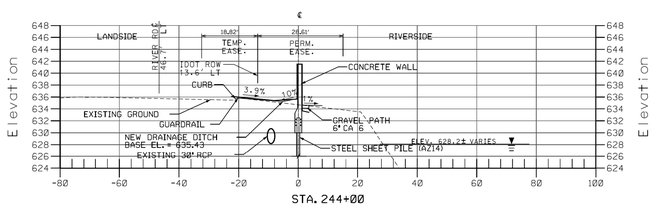

STA. 244+00

B/SHEET PILE 618.00 THROUGH STA. 244+71.45(WP27)
B/SHEET PILE 612.00 THROUGH STA. 247+05.21(WP33)
B/SHEET PILE 609.00 THROUGH STA. 248+40

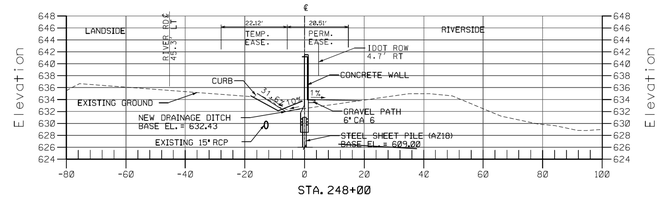

STA. 248+00

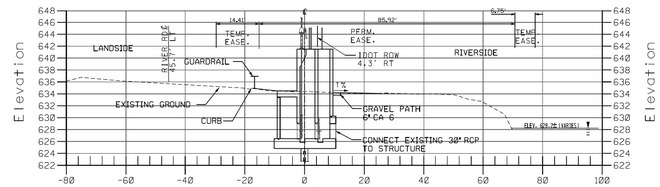

CLOSURE #7
STA.247+29

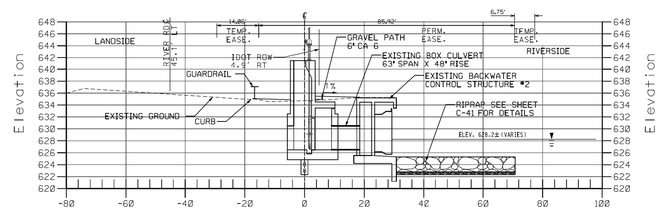

CLOSURE #6
STA.247+10

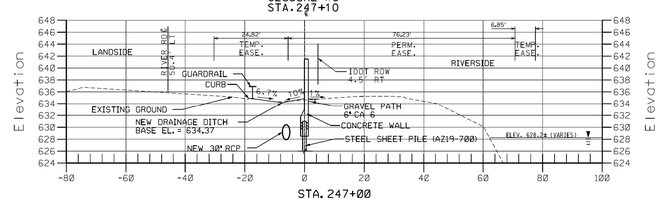

STA. 247+00

NOTES:

1. REFER TO C-42 FOR GRAVEL PATH DETAIL.
2. REFER TO STRUCTURAL SHEETS FOR STRUCTURES AND FLOODWALL DETAILS.
3. THE RIVER LEVEL, AS SHOWN, DEPICTS INFORMATION AT TIME OF SURVEY. REFER TO SECTION 08008 OF THE SPECIFICATION FOR AVERAGE FLOW STATISTICS FOR DESPLAINES RIVER.
4. CONTRACTOR SHALL PLACE SATISFACTORY FILL AS NEED TO ACHIEVE PROPOSAL GRADE AS SHOWN ON CROSS-SECTION.

15 0 15 30
1 INCH = 15 FEET
HORIZONTAL SCALE

7.5 0 7.5 15
1 INCH = 7.5 FEET
VERTICAL SCALE

AS-BUILT

US Army Corps of Engineers
Chicago District

MARK	DESCRIPTION	DATE	APPROVED

MARK	AMENDMENT DESCRIPTION	DATE	APPROVED
ASBUILT		1/7/5	

DESIGNED BY: GA | DATE: 30 SEPT 2008
DRAWN BY: GA | SCALE: AS SHOWN
CHECKED BY: JT | SOLICITATION NUMBER: W912P6-08-C-0024
SUBMITTED BY: JOHN GROBOSKI, P.E. | DATE: 08-18-08

U.S. ARMY ENGINEER DISTRICT
CORPS OF ENGINEERS
CHICAGO, ILLINOIS

DES PLAINES RIVER, ILLINOIS
LOCAL FLOOD PROTECTION
FLOODWALL 37
RIVER RD/MILWAUKEE AVE.
CROSS- SECTION
STA. 244+00 TO 248+00

SHEET REFERENCE NUMBER:
C-48
SHEET 65 OF 136

PLOT DATE: 9/17/2013
FILENAME: Levee37_Sheet65.dgn

REFERENCE DRAWING

US Army Corps of Engineers®

MARK	DESCRIPTION	DATE

DESIGNED BY: GA
DRAWN BY: KPC
CHECKED BY: FL
SUBMITTED BY: FAYE LEFFLER
SIZE: ANSI D | FILE NAME: 113244 R-003.dgn
ISSUE DATE: 12/2018
SOLICITATION NO.: W912P6-19-B-00XX
CONTRACT NO.: W912P6-19-C-00XX
PROJECT ID:
PROJECT ID:

U.S. ARMY CORPS OF ENGINEERS
CHICAGO DISTRICT
231 S. LASALLE ST. SUITE 1500
CHICAGO, ILLINOIS 60604

UPPER DES PLAINES RIVER
LEVEE 37 - PUMP STATION UPGRADE
MOUNT PROSPECT, ILLINOIS

CROSS SECTION
STA. 244+00 TO 248+00

SHEET ID
R-003

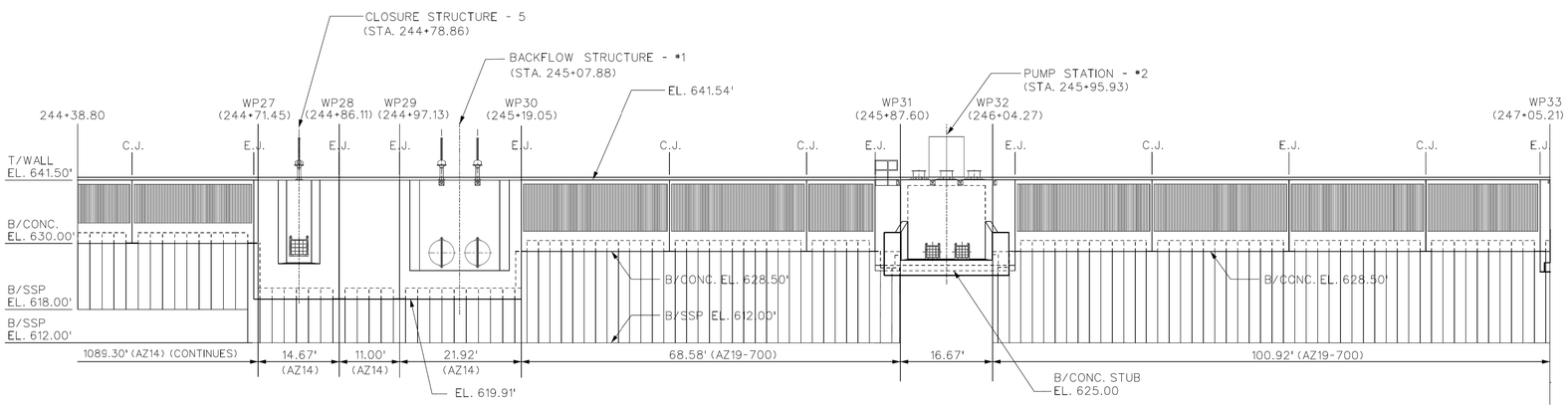

FLOODWALL ELEVATIONS (RIVERSIDE)

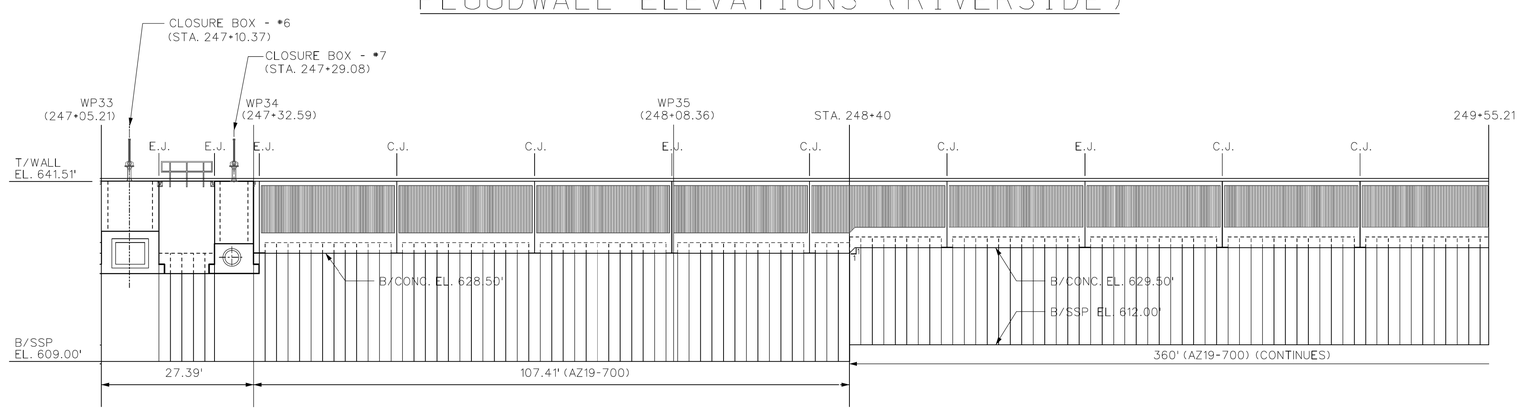

FLOODWALL ELEVATIONS (RIVERSIDE)

8 6 4 2 0 8 16FT
SCALE: 1/8"=1'-0"

AS-BUILT

US Army Corps of Engineers Chicago District

MARK	DESCRIPTION	DATE	APPROVED

SYMBOL	AS-BUILT DESCRIPTION	DATE	APPROVED	SYMBOL	DESCRIPTION	DATE	APPROVED

DESIGNED BY: D.W.F. | DATE: 30 SEPT 2008
DRAWN BY: D.B. | SCALE: AS SHOWN
CHECKED BY: J.P. | DRAWING CODE:
REVIEWED BY: S.T. | SOLICITATION NUMBER: W912P6-08-C-0024

U.S. ARMY ENGINEER DISTRICT
CORPS OF ENGINEERS
CHICAGO, ILLINOIS

DES PLAINES RIVER, ILLINOIS
LOCAL FLOOD PROTECTION
FLOODWALL 37
RIVER RD/ MILWAUKEE AVE.
STATION 244+38.80 TO
STATION 249+55.21

SHEET REFERENCE NUMBER:
S-04D
SHEET 81 OF 131

PLOT DATE: 9/24/2013
FILENAME: Levee37-wall2-04D.dgn

REFERENCE DRAWING

US Army Corps of Engineers®

MARK	DESCRIPTION	DATE

ISSUE DATE: 12/2018
SOLICITATION NO.: W912P6-19-B-00XX
CONTRACT NO.: W912P6-19-C-00XX
PROJECT ID: PROJECT ID
DESIGNED BY: D.W.F.
DRAWN BY: KPC
CHECKED BY: FL
SUBMITTED BY: FAYE LEFFLER
DATE: FILE NAME: 113244_R-004.dgn
SIZE: ANSI D

U.S. ARMY CORPS OF ENGINEERS
CHICAGO DISTRICT
231 S. LASALLE ST. SUITE 1500
CHICAGO, ILLINOIS 60604

UPPER DES PLAINES RIVER
LEVEE 37 - PUMP STATION UPGRADE
MOUNT PROSPECT, ILLINOIS

STATION 244+38.80 TO
STATION 249+55.21

SHEET ID
R-004

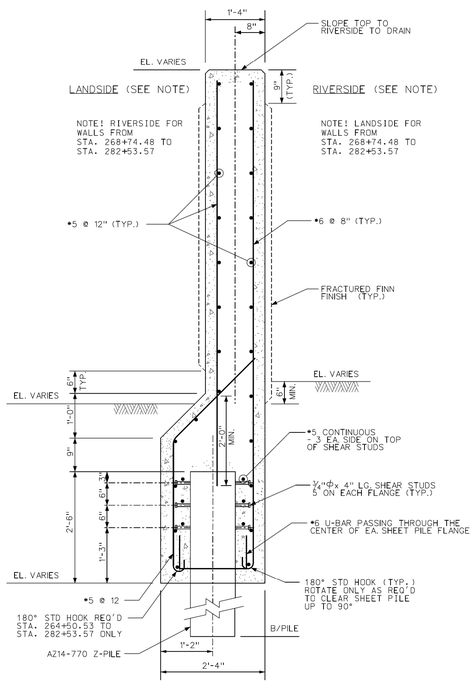

TYPICAL AZ14-770 I-WALL SECTION

SCALE: 1" = 1'-0"

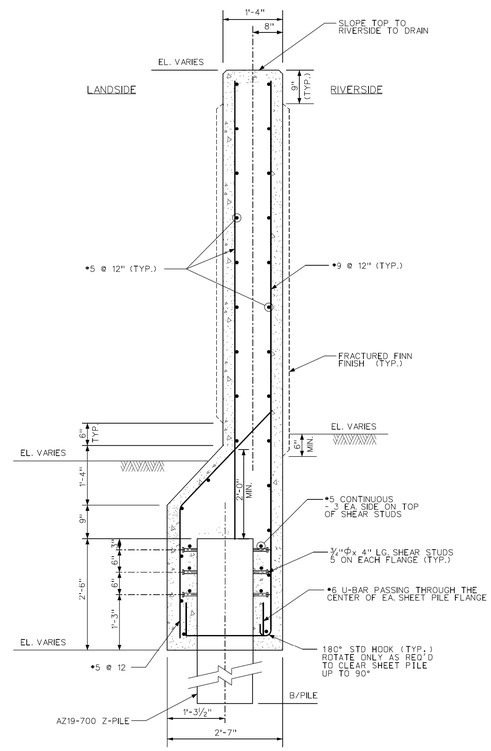

TYPICAL AZ19-700 I-WALL SECTION

SCALE: 1" = 1'-0"

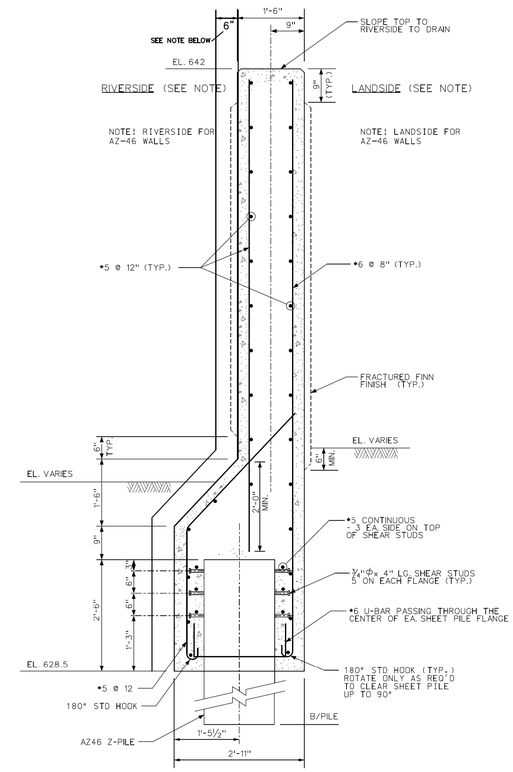

TYPICAL AZ46 I-WALL SECTION

SCALE: 1" = 1'-0"

STATION 273+50 (2 25' SECTIONS OF I-WALL)

CONTRACTOR MOVED HAUNCH SIDE OF FORM 6" TO ENSURE THAT COVERAGE OVER SHEET PILE WILL BE CONSISTANT WITH DESIGN. CONTRACTOR BUILT UP THE UPPER PORTION OF I-WALL FORM TO MAINTAIN DESIGN THICKNESS. THE ANGLED AND VERTICAL PORTION OF HAUNCH HAS AN ADDITIONAL 6" OF CONCRETE.

1.) ANGLE BAR SPLICED AND EXTENDED TO VERTICAL MAT
2.) "U" BAR EXTENDED TO BOTH FACE MAT

12 6 0 1 2 3 4 5

SCALE: 1" = 1'-0"

AS-BUILT

US Army Corps of Engineers Chicago District

MARK	DESCRIPTION	DATE	APPROVED	MARK	DESCRIPTION	DATE	APPROVED
ASBUILT							

DESIGNED BY: L.T., J.P.	DATE: 30 SEPT 2008		
DRAWN BY: M.M., D.S.	SCALE: AS SHOWN		
CHECKED BY: J.P.	DRAWING CODE: DESP37-S01.DGN		
REVIEWED BY: S.T.	SOLICITATION NUMBER: W912P6-08-C-0024		

U.S. ARMY ENGINEER DISTRICT
CORPS OF ENGINEERS
CHICAGO, ILLINOIS

DES PLAINES RIVER, ILLINOIS
LOCAL FLOOD PROTECTION
FLOODWALL 37
RIVER RD/MILWAUKEE AVE.
SHEET PILE I-WALLS
TYPICAL SECTIONS

SHEET REFERENCE NUMBER:
S-05
SHEET 90 OF 136

PLOT DATE: 9/20/2013
FILENAME: S-05-001.dgn

US Army Corps of Engineers®

MARK	DESCRIPTION	DATE

ISSUE DATE: 12/2018	
SOLICITATION NO.: W912P6-19-B-00XX	
CONTRACT NO.: W912P6-19-C-00XX	
PROJECT ID: PROJECT ID	
FILE NAME: 113244 R-005.dgn	

U.S. ARMY CORPS OF ENGINEERS
CHICAGO DISTRICT
231 S. LASALLE ST., SUITE 1500
CHICAGO, ILLINOIS 60604

DESIGNED BY:	
DRAWN BY:	
KPC	
CHECKED BY:	
FL	
SUBMITTED BY:	
FAYE LEFTWICH	
SIZE: ANSI D	FILE NAME: 113244 R-005.dgn

UPPER DES PLAINES RIVER
LEVEE 37 - PUMP STATION UPGRADE
MOUNT PROSPECT, ILLINOIS

SHEET PILE I-WALLS
TYPICAL SECTIONS

SHEET ID

R-005

REFERENCE DRAWING

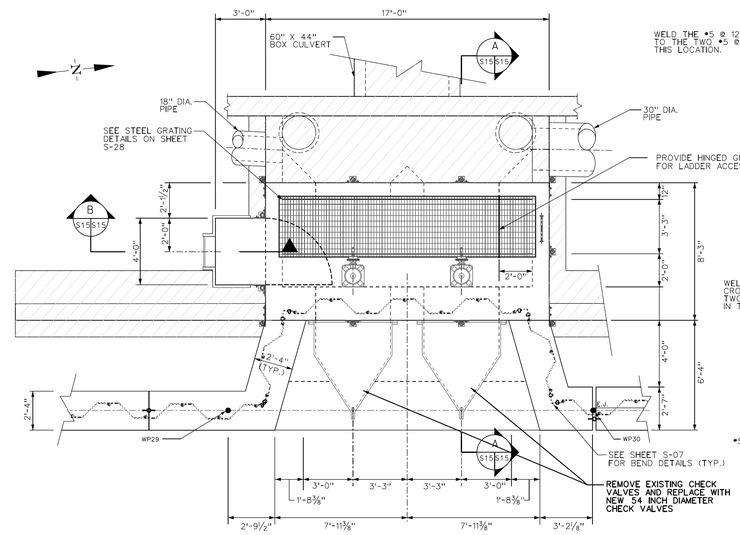

PLAN
SCALE: 3/8" = 1'-0"

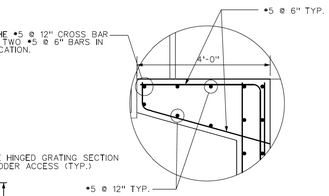

DETAIL 1
NTS

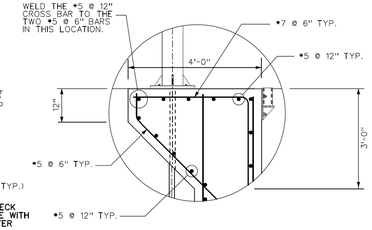

DETAIL 2
NTS

NOTES:

1. CLEAR COVER ON MEMBERS 12" THICK OR LESS IS 2" TYP AND 3" TYP ON MEMBERS GREATER THAN 12" THICK UNLESS OTHERWISE NOTED.

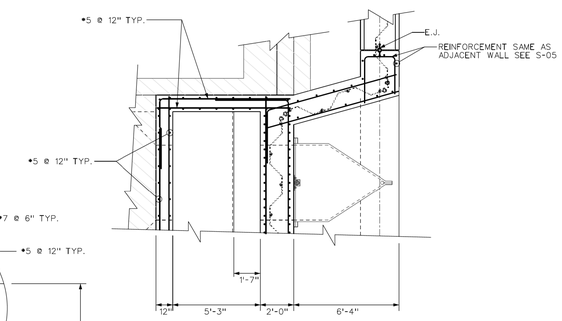

SECTION
SCALE: 3/8" = 1'-0"

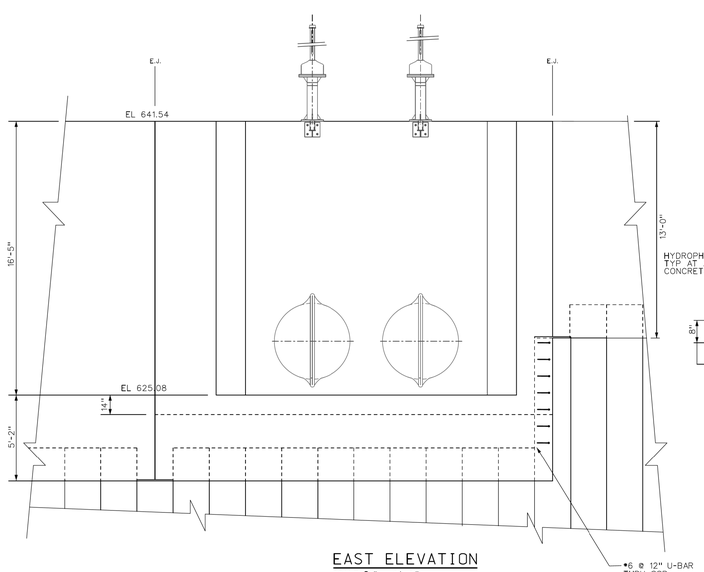

EAST ELEVATION
SCALE: 3/8" = 1'-0"

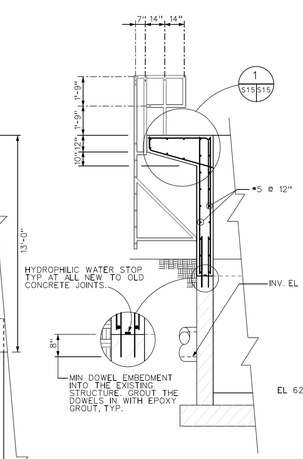

SECTION
SCALE: 3/8" = 1'-0"

NOTE:

BASE MAT WILL BE CUT AS MUCH AS NEEDED TO BE ABLE TO DRIVE THE PILES.

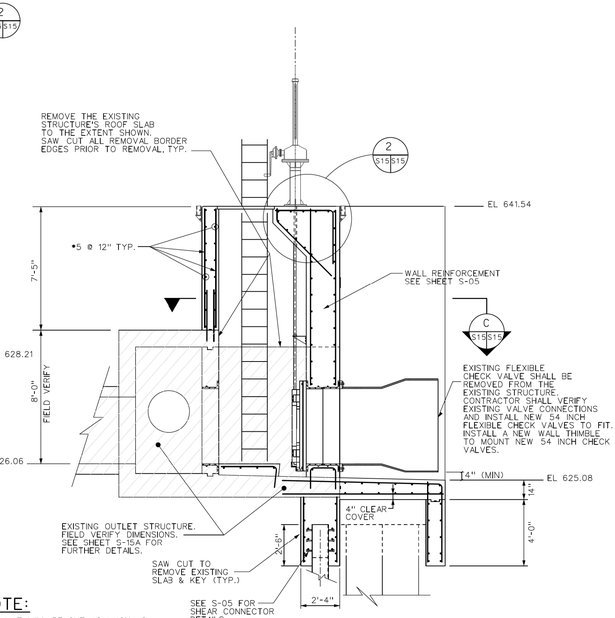

SECTION
SCALE: 3/8" = 1'-0"

AS-BUILT

SCALE: 1/2" = 1'-0"

US Army Corps of Engineers
Chicago District

MARK	DESCRIPTION	DATE	APPROVED

SYMBOL	AMENDMENT DESCRIPTION	DATE	APPROVED
ASBUILT		06/21	

DESIGNED BY: L.T., J.P.	DATE: 30 SEPT 2008
DRAWN BY: M.N., D.S.	SCALE: AS SHOWN
CHECKED BY: J.P.	DRAWING CODE: DESP37-S15.DGN
REVIEWED BY: S.T.	SOLICITATION NO.: W912P6-08-C-0024

U.S. ARMY ENGINEER DISTRICT
CORPS OF ENGINEERS
CHICAGO, ILLINOIS

DES PLAINES RIVER, ILLINOIS
LOCAL FLOOD PROTECTION
FLOODWALL 37
RIVER RD/MILWAUKEE AVE.
BACKFLOW STRUCTURE NO. 1
STRUCTURAL ADDITIONS
PLAN, ELEVATIONS AND SECTIONS

SHEET REFERENCE NUMBER:
S-15
SHEET 100 OF 136

DGN DATE: 12/20/2020
FILENAME: L-Levee37-ed12S-sheet15.dgn

US Army Corps of Engineers®

MARK	DESCRIPTION	DATE

ISSUE DATE:	12/2018
SOLICITATION NO.:	W912P6-19-B-00XX
CONTRACT NO.:	W912P6-19-C-00XX
PROJECT ID:	PROJECT ID
FILE NAME:	113244 R-006.dgn

U.S. ARMY CORPS OF ENGINEERS
CHICAGO DISTRICT
231 S. LASALLE ST. SUITE 1500
CHICAGO, ILLINOIS 60604

DESIGNED BY:	
DRAWN BY: KPC	
CHECKED BY: FL	
SUBMITTED BY: FAYE LEFFLER, P.E.	
SIZE: ANSI D	FILE NAME: 113244 R-006.dgn

UPPER DES PLAINES RIVER
LEVEE 37 - PUMP STATION UPGRADE
MOUNT PROSPECT, ILLINOIS

BACKFLOW STRUCTURE NO. 1
STRUCTURAL ADDITIONS
PLAN, ELEVATIONS AND SECTIONS

SHEET ID
R-006

REFERENCE DRAWING

...\Levee 37_Pump Station Upgrade Project-113244\40 - Geospatial Data\Drawings\CAD_BIM_Sheets\113244_R-006.dgn
12:48:24 PM 12/27/2019 PD: AEC_pdf.pltcfg DS: AEC_Screen.dscript

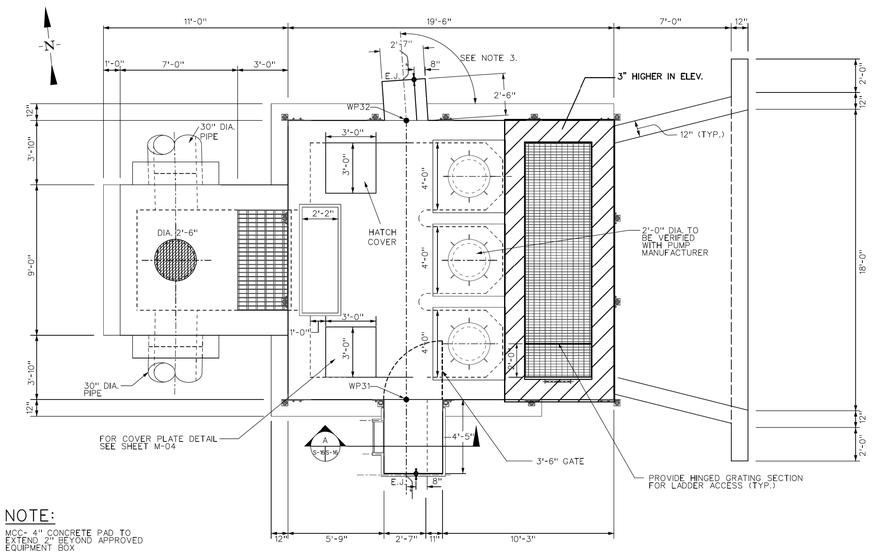

NOTE:
MCC- 4" CONCRETE PAD TO EXTEND 2" BEYOND APPROVED EQUIPMENT BOX

PLAN
SCALE: 3/8" = 1'-0"

NOTES:
1. CLEAR COVER ON MEMBERS 12" THICK OR LESS IS 2" TYP AND 3" TYP ON MEMBERS GREATER THAN 12" THICK UNLESS OTHERWISE NOTED.
2. ALL REINFORCEMENT SHALL BE #5 @ 12" UNLESS OTHERWISE SHOWN.
3. THE ANGLE FROM THE HORIZONTAL IS 94 DEGREES PLUS/MINUS. FIELD VERIFY.

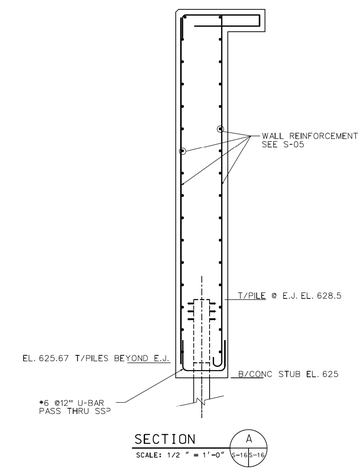

SECTION A
SCALE: 1/2 " = 1'-0"

SOUTH ELEVATION
SCALE: 3/8" = 1'-0"

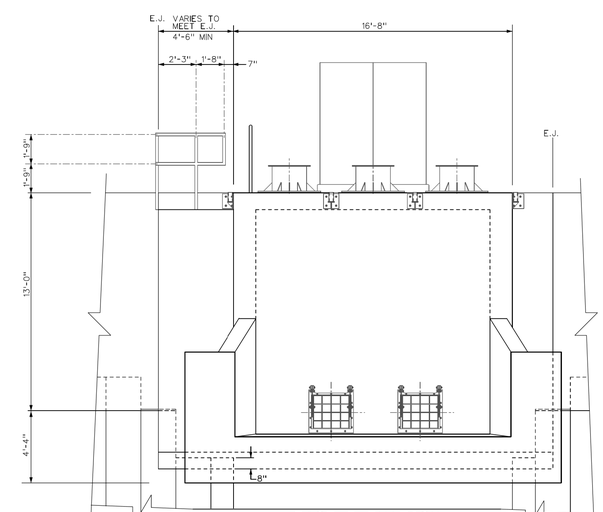

EAST ELEVATION
SCALE: 3/8" = 1'-0"

AS-BUILT

REFERENCE DRAWING

US Army Corps of Engineers®

US Army Corps of Engineers Chicago District

MARK	DESCRIPTION	DATE

MARK	DESCRIPTION	DATE	APPROVED	MARK	DESCRIPTION	DATE	APPROVED

ASBUILT

DESIGNED BY: L.T., J.P.	DATE: 30 SEPT 2008
DRAWN BY: M.A., B.S.	SCALE: AS SHOWN
CHECKED BY: J.P.	DRAWING CODE: DESP37-S21DGN
REVIEWED BY: S.T.	SOLICITATION NUMBER: W912P6-08-C-0024

U.S. ARMY ENGINEER DISTRICT
CORPS OF ENGINEERS
CHICAGO, ILLINOIS

DES PLAINES RIVER, ILLINOIS
LOCAL FLOOD PROTECTION
FLOODWALL 37
RIVER RD/MILWAUKEE AVE.
PUMP STATION #2
PLAN AND ELEVATIONS

SHEET REFERENCE NUMBER:
S-16
SHEET 102 OF 145

PLOT DATE: 9/19/2013
FILENAME: S-16-PUMP-PLAN-ELEV.dgn

DESIGNED BY: L.T., J.P.	ISSUE DATE: 12/2018
DRAWN BY: K.P.C.	SOLICITATION NO.: W912P6-19-B-00XX
CHECKED BY: FL	CONTRACT NO.: W912P6-19-C-00XX
SUBMITTED BY: FAYE LEFFLER	PROJECT ID:
FILE NAME: 113244_R-007.dgn	PROJECT ID:
ANSI D	

U.S. ARMY CORPS OF ENGINEERS
CHICAGO DISTRICT
231 S. LASALLE ST. SUITE 1500
CHICAGO, ILLINOIS 60604

UPPER DES PLAINES RIVER
LEVEE 37 - PUMP STATION UPGRADE
MOUNT PROSPECT, ILLINOIS

PUMP STATION #2
PLAN AND ELEVATIONS

SHEET ID
R-007

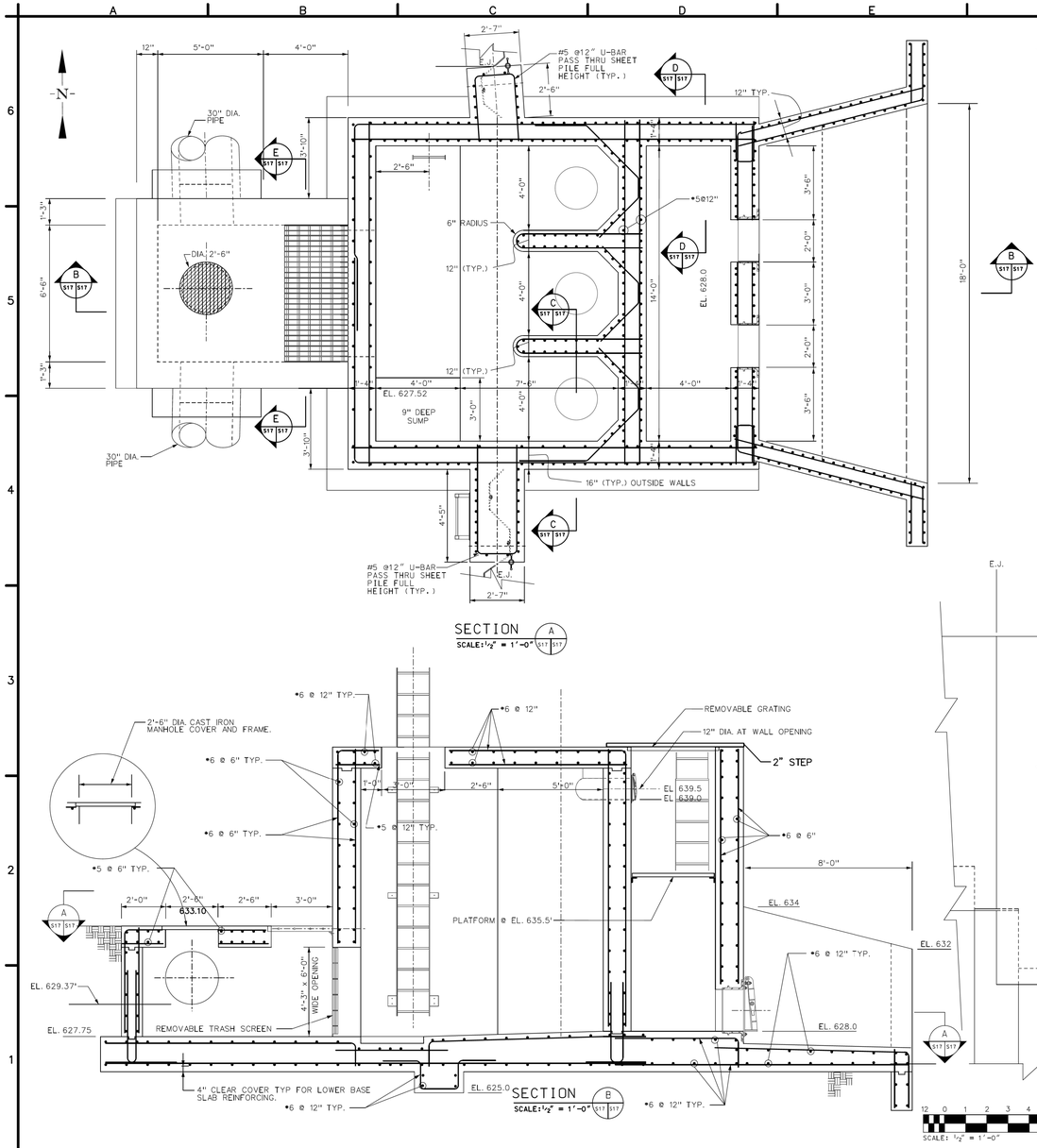

SECTION A
SCALE: 1/2" = 1'-0"

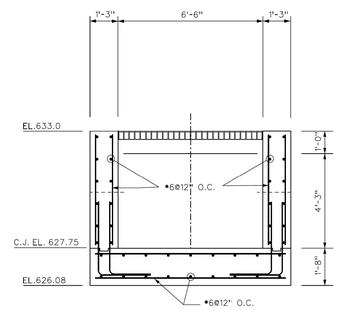

SECTION E
SCALE: 1/2" = 1'-0"

SECTION B
SCALE: 1/2" = 1'-0"

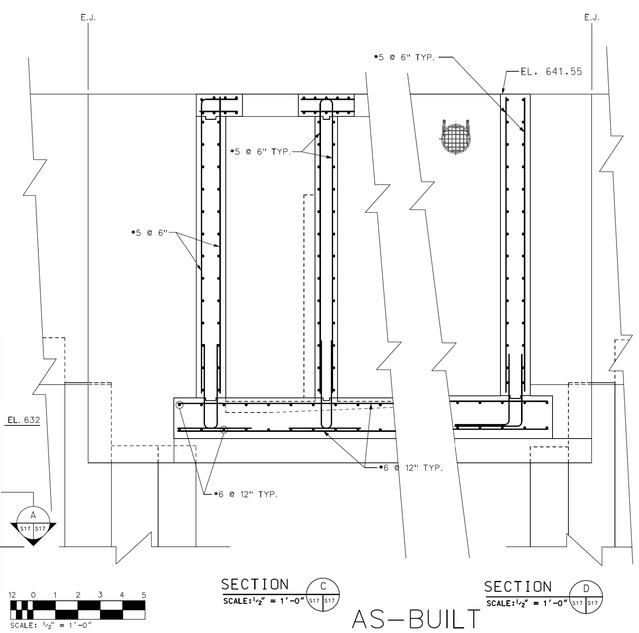

SECTION C
SCALE: 1/2" = 1'-0"

SECTION D
SCALE: 1/2" = 1'-0"

AS-BUILT

NOTES:

1. ALL REINFORCING CLEAR COVER SHALL BE 2" TYP ON MEMBERS 12" THICK OR LESS AND SHALL BE 3" TYP ON MEMBERS GREATER THAN 12" THICK UNLESS OTHERWISE NOTED.
2. ALL REINFORCEMENT SHALL BE •5 @ 12" UNLESS OTHERWISE SHOWN.

US Army Corps of Engineers Chicago District

SYMBOL	AMENDMENT DESCRIPTION	DATE	APPROVED	SYMBOL	DESCRIPTION	DATE APPROVED
ASBUILT		06/12				

DESIGNED BY: J.L.P. | DATE: 30 SEPT 2008
DRAWN BY: M.N., D.S. | SCALE: AS SHOWN
CHECKED BY: J.P. | DRAWING CODE: 113244_R-008.DGN
REVIEWED BY: S.T. | SOLICITATION NUMBER: W912P6-08-C-0024

U.S. ARMY ENGINEER DISTRICT
CORPS OF ENGINEERS
CHICAGO, ILLINOIS

DES PLAINES RIVER, ILLINOIS
LOCAL FLOOD PROTECTION
FLOODWALL 37
RIVER RD/MILWAUKEE AVE.
PUMP STATION #2
SECTIONS

SHEET REFERENCE NUMBER:
S-17
SHEET 103 OF 145

PLOT DATE: 9/19/2013
FILENAME: Levee37-sect37.dgn

US Army Corps of Engineers®

MARK	DESCRIPTION	DATE

DESIGNED BY:	ISSUE DATE: 12/2018
DRAWN BY: KPC	SOLICITATION NO.: W912P6-19-B-00XX
CHECKED BY: FL	CONTRACT NO.: W912P6-19-C-00XX
SUBMITTED BY: FAYE LEFFLER, PE	PROJECT ID:
SIZE: ANSI D	FILE NAME: 113244_R-008.dgn

U.S. ARMY CORPS OF ENGINEERS
CHICAGO DISTRICT
231 S. LASALLE ST. SUITE 1500
CHICAGO, ILLINOIS 60604

UPPER DES PLAINES RIVER
LEVEE 37 - PUMP STATION UPGRADE
MOUNT PROSPECT, ILLINOIS

PUMP STATION #2
SECTIONS

SHEET ID
R-008

REFERENCE DRAWING

...\Levee 37_Pump Station Upgrade Project-113244\40 - Geospatial Data\Drawings\CAD_BIM_Sheets\113244_R-008.dgn
12:43:06 PM 12/27/2019 PD: AEC_pdf.pltcfg DS: AEC_Screen.dscript

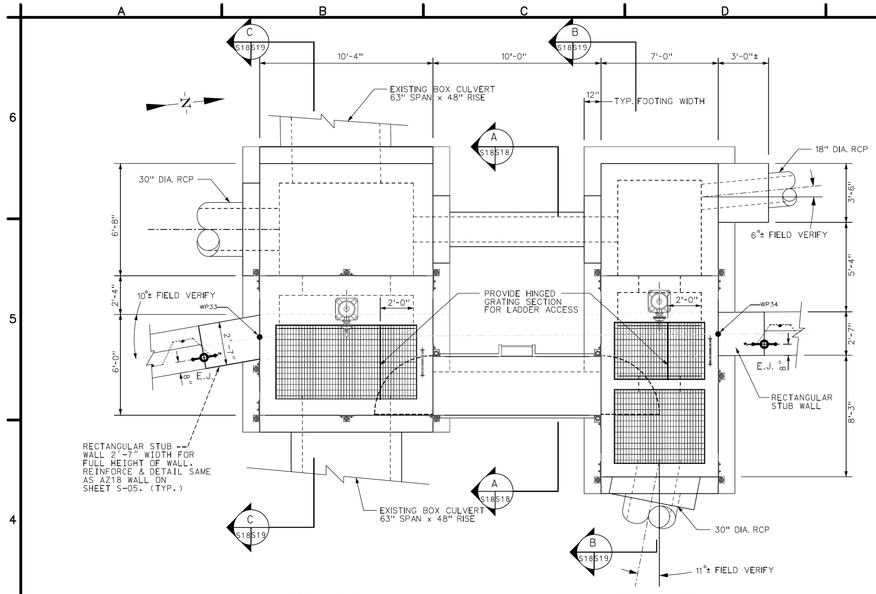

CLOSURE #6 PLAN
SCALE: 3/8" = 1'-0"

CLOSURE #7 PLAN
SCALE: 3/8" = 1'-0"

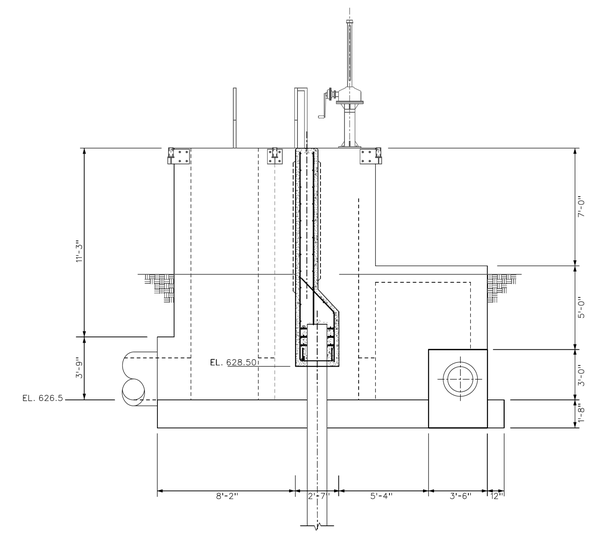

CLOSURE BOX NORTH ELEVATION
SCALE: 3/8" = 1'-0"

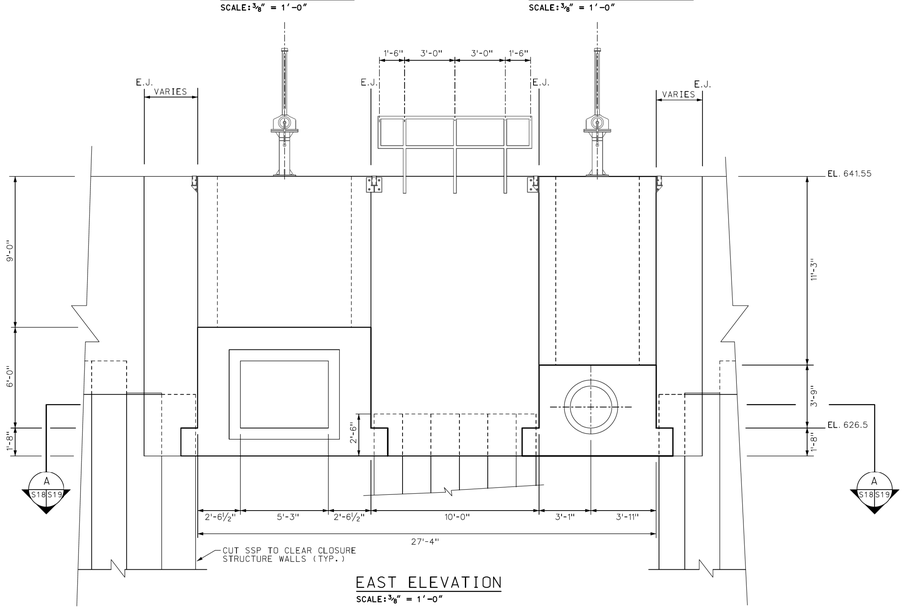

EAST ELEVATION
SCALE: 3/8" = 1'-0"

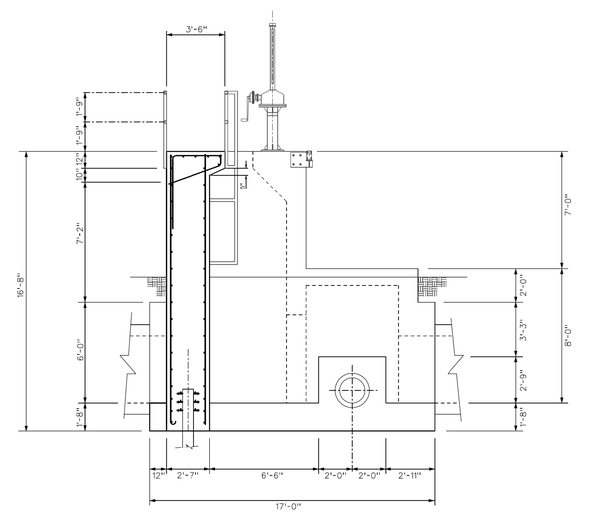

SECTION A S18S19
SCALE: 3/8" = 1'-0"

AS-BUILT

SCALE: 1/4" = 1'-0"

US Army Corps of Engineers Chicago District

MARK	DESCRIPTION	DATE	APPROVED	SYMBOL	DESCRIPTION	DATE	APPROVED

MARK	AMENDMENT DESCRIPTION	DATE	APPROVED
	ASBUILT	06/12	

DESIGNED BY: L.T., J.P.	DATE: 30 SEPT 2008	
DRAWN BY: M.W., S.S.	SCALE: AS SHOWN	
CHECKED BY: J.P.	DRAWING CODE: DESR37-S18.DGN	
REVIEWED BY: S.T.	SOLICITATION NUMBER: W912P6-08-C-0024	

U.S. ARMY ENGINEER DISTRICT
CORPS OF ENGINEERS
CHICAGO, ILLINOIS

DES PLAINES RIVER, ILLINOIS
LOCAL FLOOD PROTECTION
FLOODWALL 37
RIVER RD/MILWAUKEE AVE.
CLOSURES #6 AND #7
PLAN AND ELEVATIONS

SHEET REFERENCE NUMBER:
S-18
SHEET 104 OF 145

PLOT DATE: 9/19/2013
FILENAME: Levee37-WS018.dgn

US Army Corps of Engineers®

MARK	DESCRIPTION	DATE

DESIGNED BY: L.T., J.P.	ISSUE DATE: 12/2018
DRAWN BY: KPC	SOLICITATION NO.: W912P6-19-B-00XX
CHECKED BY:	CONTRACT NO.: W912P6-19-C-00XX
SUBMITTED BY: FAYE LEFFLER	PROJECT ID:
SIZE: ANSI D	FILE NAME: 113244_R-009.dgn

U.S. ARMY CORPS OF ENGINEERS
CHICAGO DISTRICT
231 S. LASALLE ST., SUITE 1500
CHICAGO, ILLINOIS 60604

UPPER DES PLAINES RIVER
LEVEE 37 - PUMP STATION UPGRADE
MOUNT PROSPECT, ILLINOIS

CLOSURES #6 AND #7
PLAN AND ELEVATIONS

SHEET ID
R-009

REFERENCE DRAWING

NOTES:

1. ALL REINFORCING CLEAR COVER SHALL BE 2" TYP ON MEMBERS 12" THICK OR LESS AND SHALL BE 3" TYP ON MEMBERS GREATER THAN 12" THICK UNLESS OTHERWISE NOTED.

2. ALL REINFORCEMENT SHALL BE #5 @ 12" UNLESS OTHERWISE SHOWN.

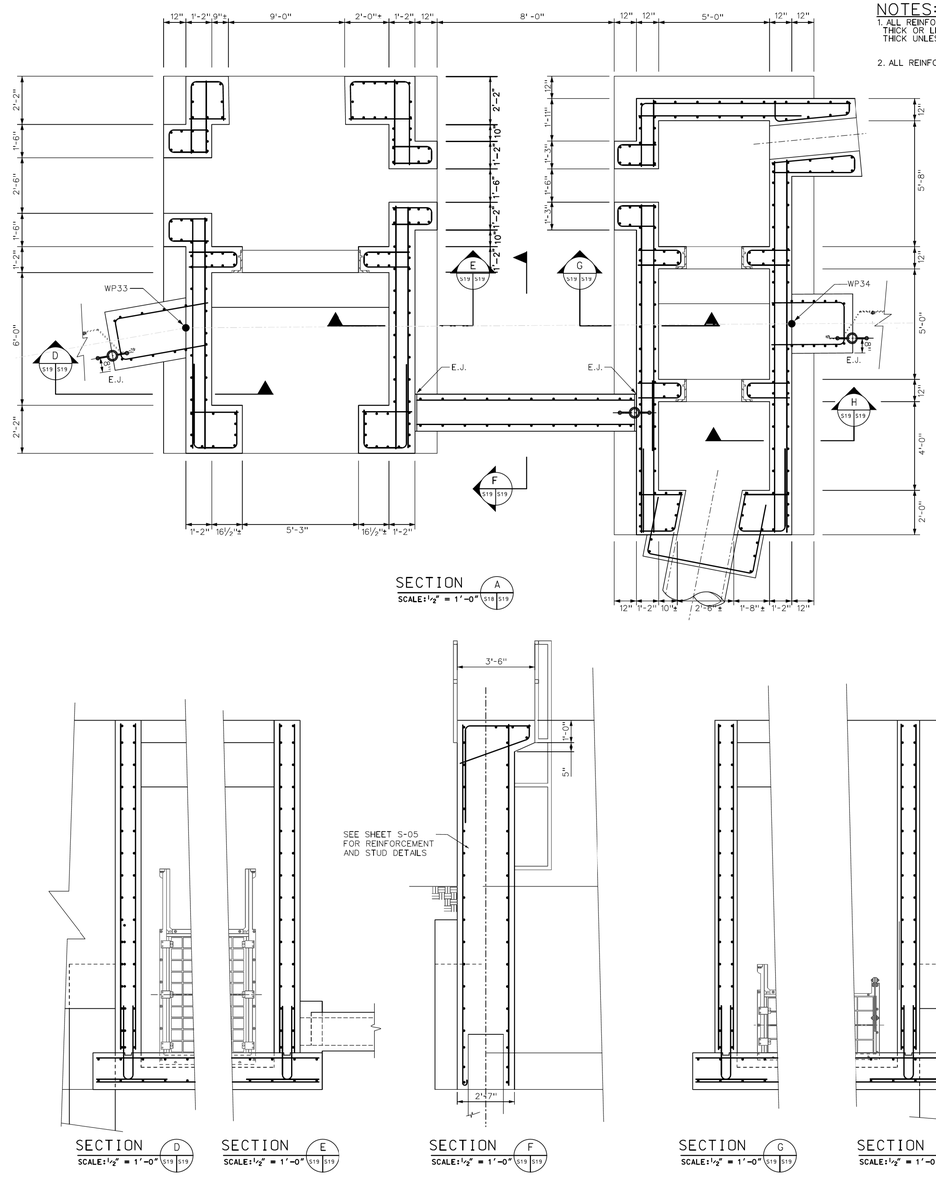

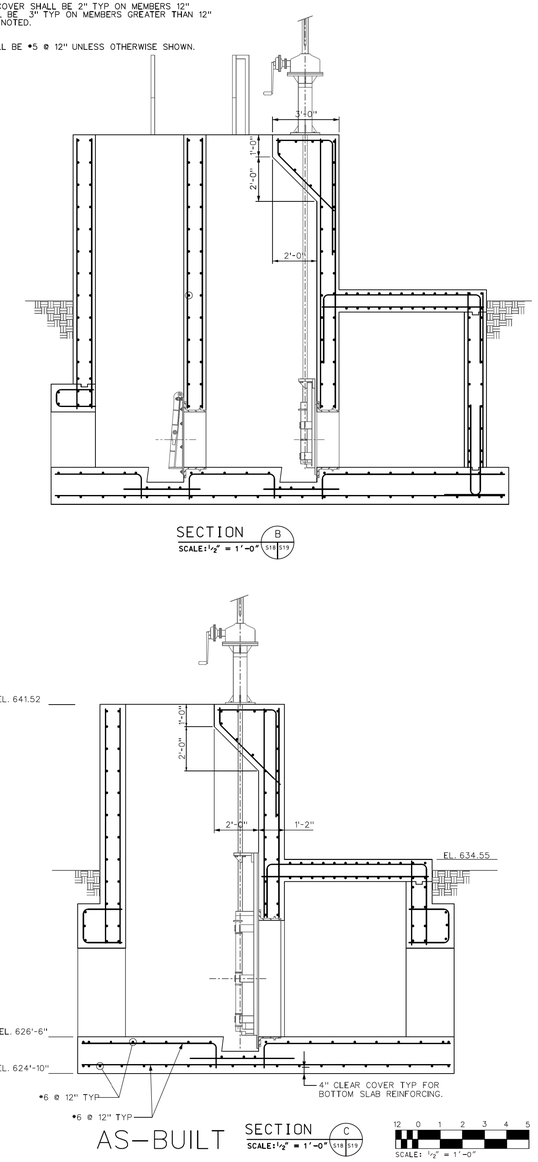

US Army Corps of Engineers Chicago District

MARK	DESCRIPTION	DATE	APPROVED	DESCRIPTION	DATE APPROVED

AS-BUILT

MARK	AMENDMENT DESCRIPTION	DATE	APPROVED	STAMPED

DESIGNED BY: L.T., J.P.	DATE: 30 SEPT 2008	
DRAWN BY: M.N., D.S.	SCALE: AS SHOWN	
CHECKED BY: J.P.	DRAWING NO.: DES P37-S19.DGN	
REVIEWED BY: S.T.	SOLICITATION NUMBER: W912P6-08-C-0024	

U.S. ARMY ENGINEER DISTRICT
CORPS OF ENGINEERS
CHICAGO, ILLINOIS

DES PLAINES RIVER, ILLINOIS
LOCAL FLOOD PROTECTION
LEVEE 37 - PUMP STATION
RIVER RD/MILWAUKEE AVE.
CLOSURES #6 AND #7
SECTIONS

SHEET REFERENCE NUMBER:
S-19
SHEET 105 OF 145

PLOT DATE: 9/19/2013
FILENAME: Levee37-ps519.dgn

US Army Corps of Engineers®

MARK	DESCRIPTION	DATE

DESIGNED BY: L.T., J.P.	ISSUE DATE: 12/2018
DRAWN BY: KPC	SOLICITATION NO.: W912P6-19-B-00XX
CHECKED BY: FL	CONTRACT NO.: W912P6-19-C-00XX
SUBMITTED BY: FAYE LEFFLER, P.E.	PROJECT ID:
SIZE: ANSI D	FILE NAME: 113244 R-010.dgn

U.S. ARMY CORPS OF ENGINEERS
CHICAGO DISTRICT
231 S. LASALLE ST. SUITE 1500
CHICAGO, ILLINOIS 60604

UPPER DES PLAINES RIVER
LEVEE 37 - PUMP STATION UPGRADE
MOUNT PROSPECT, ILLINOIS

CLOSURES #6 AND #7
SECTIONS

SHEET ID

R-010

REFERENCE DRAWING

...\Levee 37_Pump Station Upgrade Project-113244\40 - Geospatial Data\Drawings\CAD_BIM_Sheets\113244_R-010.dgn
12:36:09 PM 12/27/2019 PD: AEC_pdf.pltcfg DS: AEC_Screen.dscript